Generate swept sine/cosine waveforms with two filters

John R Ambrose, Mixed Signal Integration, San Jose, CA; Edited by Martin Rowe and Fran Granville - June 23, 2011

Demodulators, directional circuits, and other electronics applications often need two sine waves with a 90° difference in phase—a sine wave and its cosine wave. Engineers typically use analog filters to create the phase shift. This approach, however, offers a limited frequency range. Using the circuit in **Figure 1**, you can make a swept sine/cosine pair at frequencies of less than 1 Hz to 25 kHz.

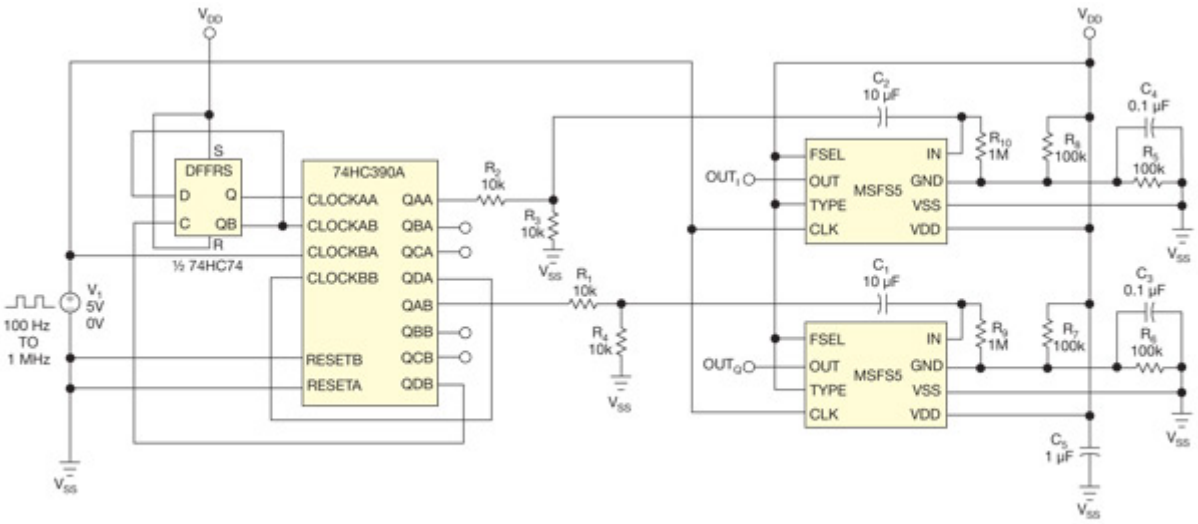

Figure 1 This circuit lets you make a swept sine/cosine pair at frequencies of less than 1 Hz to 25 kHz.

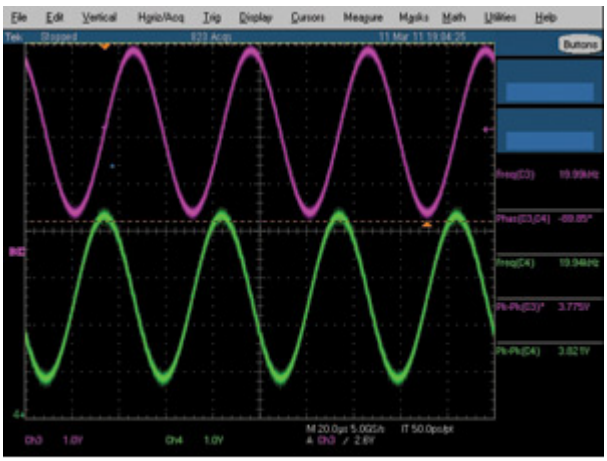

Figure 2 The phase reading on the scope is −89.85°.

Figure 3 When swept in frequency, the phase varies from −89 to −91°.

The Mixed Signal Integration MSFS5 selectable lowpass/bandpass switched-capacitor filter removes the harmonics from a square wave you apply to its inputs. The clock for the MSFS5 is 100 times the

input square wave. The 74HC390 and 74HC74 form a divide-by-25 and a divide-by-two circuit. The Q outputs from the 74HC74 connect to the two divide-by-two circuits in the 74HC390A, which produces square waves that are 1/100 of the filter clock's frequency and are 90° out of phase from each other. A square wave at CMOS levels would saturate the filter, so the circuit uses resistor dividers R_1 through R_4 to reduce the signal's amplitude.

Figure 2 shows the output of the two filters at 20 kHz with a system clock of 2 MHz. Note that the phase reading on the scope is at −89.85°. When swept in frequency, the phase varies from −89 to −91°. **Figure 3** shows a 20-kHz Lissajous pattern.

Read More
Design Ideas

Measuring the circuit's distortion using a spectrum analyzer and an Audio Precision audio analyzer shows a THD (total harmonic distortion) of −49 dB. Testing shows that the circuit has no discontinuity at the filter outputs with either FSK (frequency-shift keying) or FM (frequency modulation).