Two-DAC circuit adds and subtracts
Figure 1

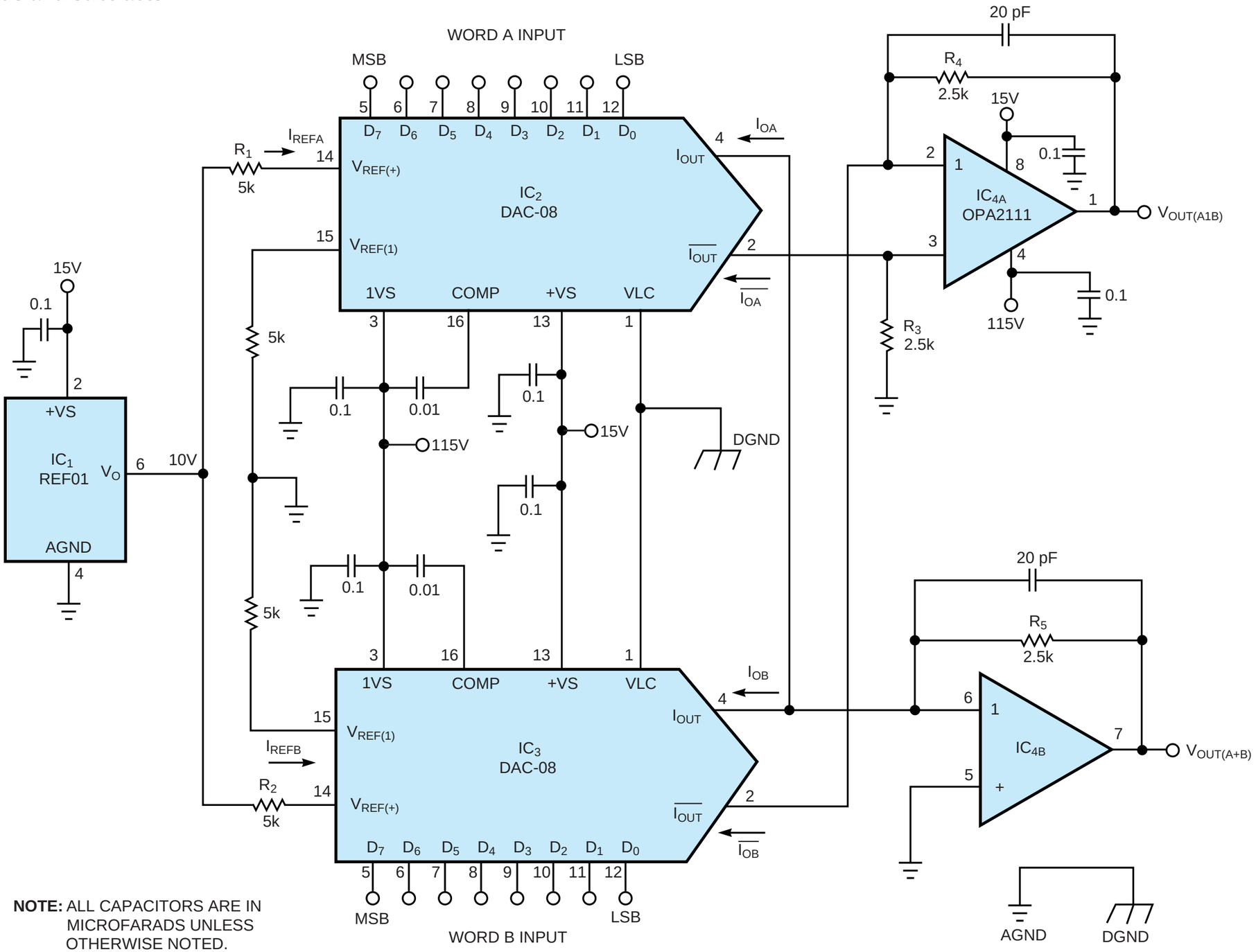

NOTE: ALL CAPACITORS ARE IN MICROFARADS UNLESS OTHERWISE NOTED.

Two DACs and two op amps simultaneously carry out both addition and subtraction on two 8-bit binary words.