Figure 1

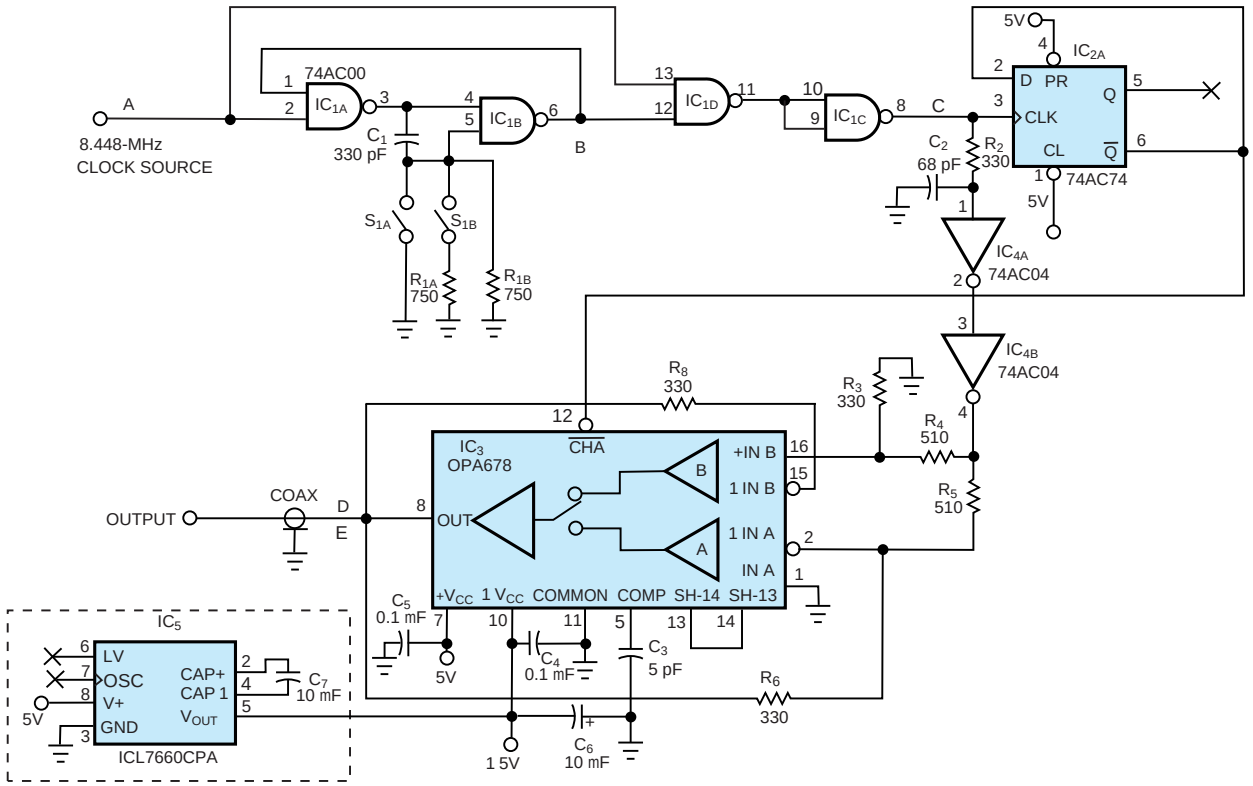

A simple bit-pattern generator allows you to test telecommunication equipment.