Figure 3

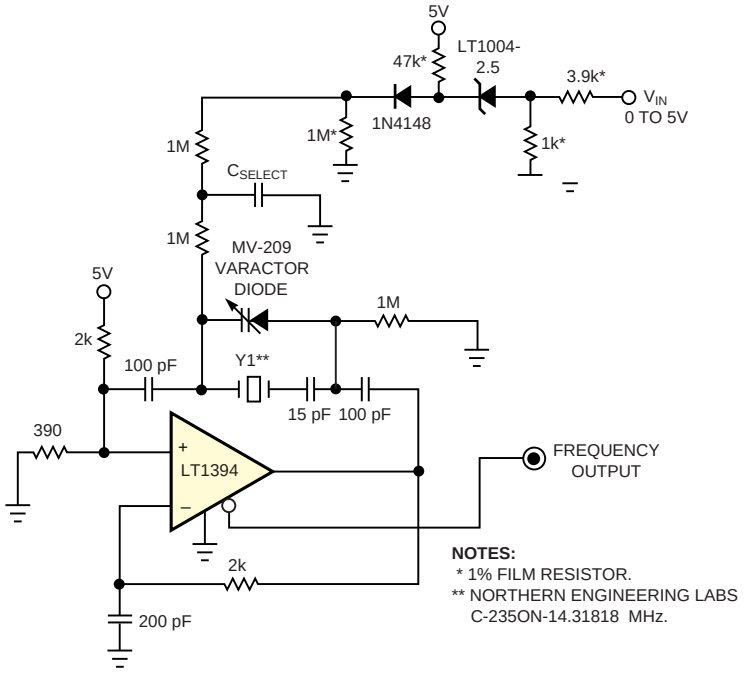

Another variant of the basic crystal oscillator permits tuning of a 4XNTSC subcarrier (14.31818 MHz) by more than ±240 ppm (±4 kHz).