Figure 2

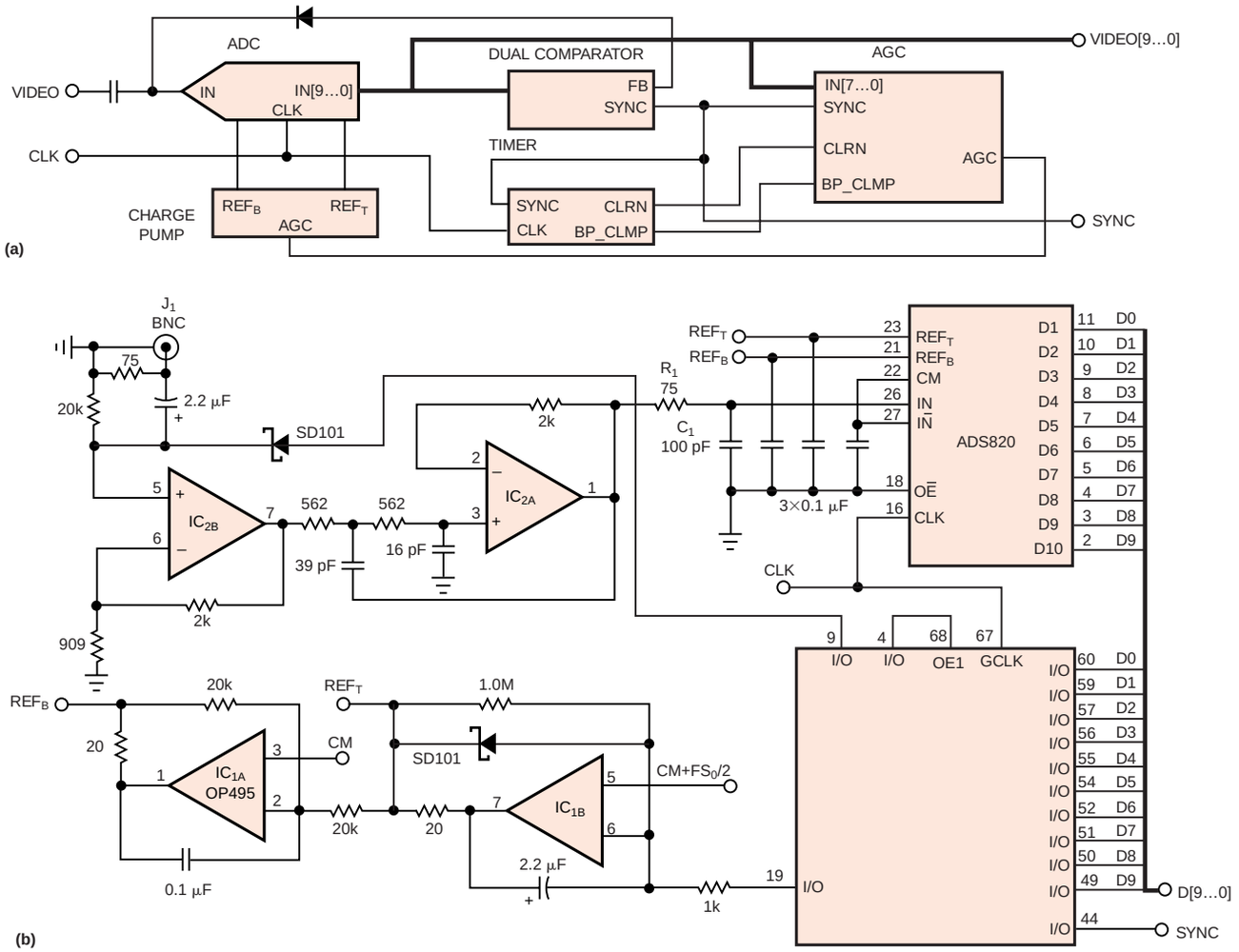

The major elements of the video-conditioning front end include the ADC itself, a charge pump, an AGC controller, dual digital comparators, and a timer (a). A sample design incorporates all digital functions into an FPGA (IC_1) (b).