**Figure 1**

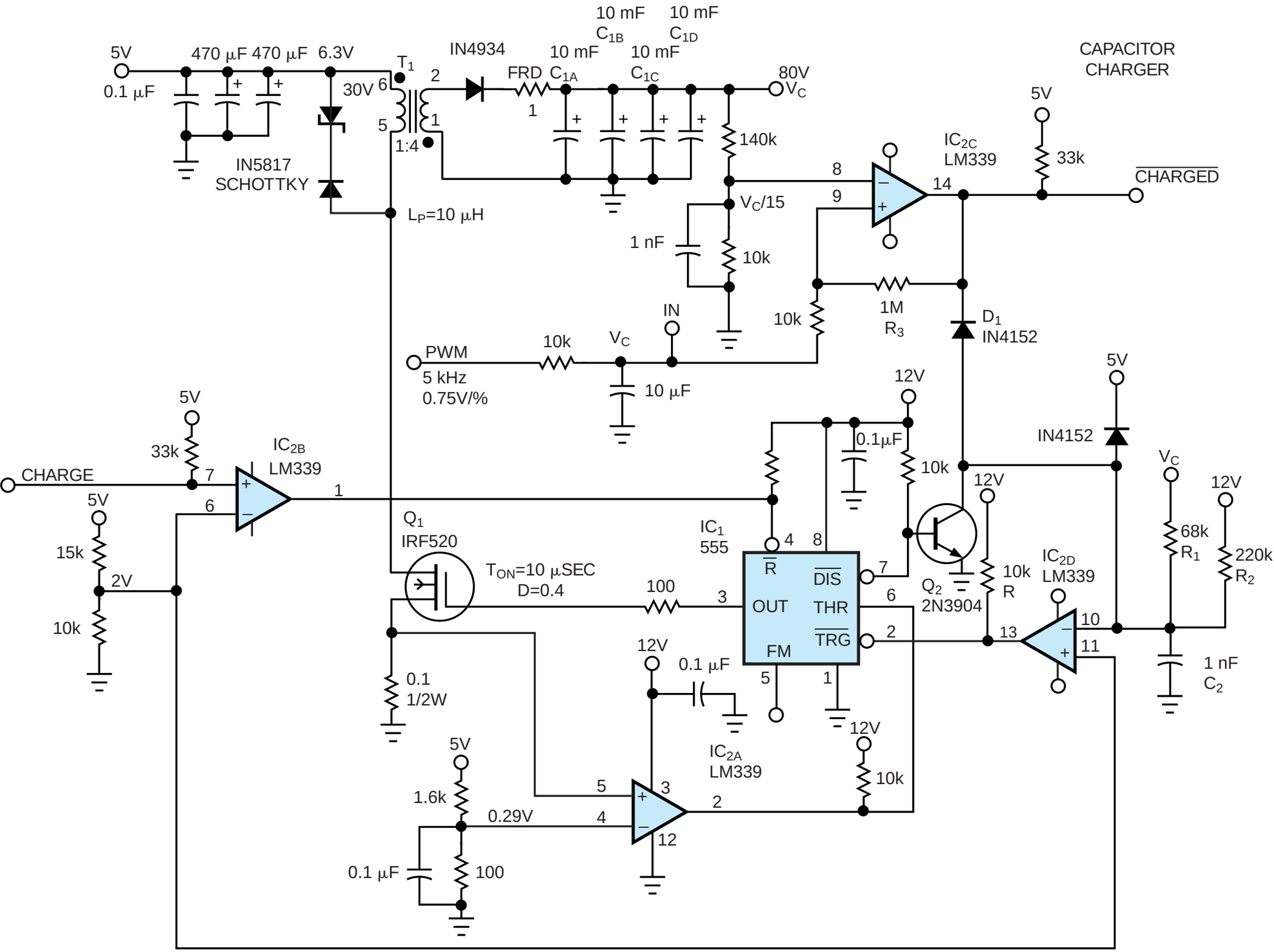


**The duty cycle of a CMOS pulse train determines the target charged voltage for a bank of high-energy capacitors.**