Figure 1

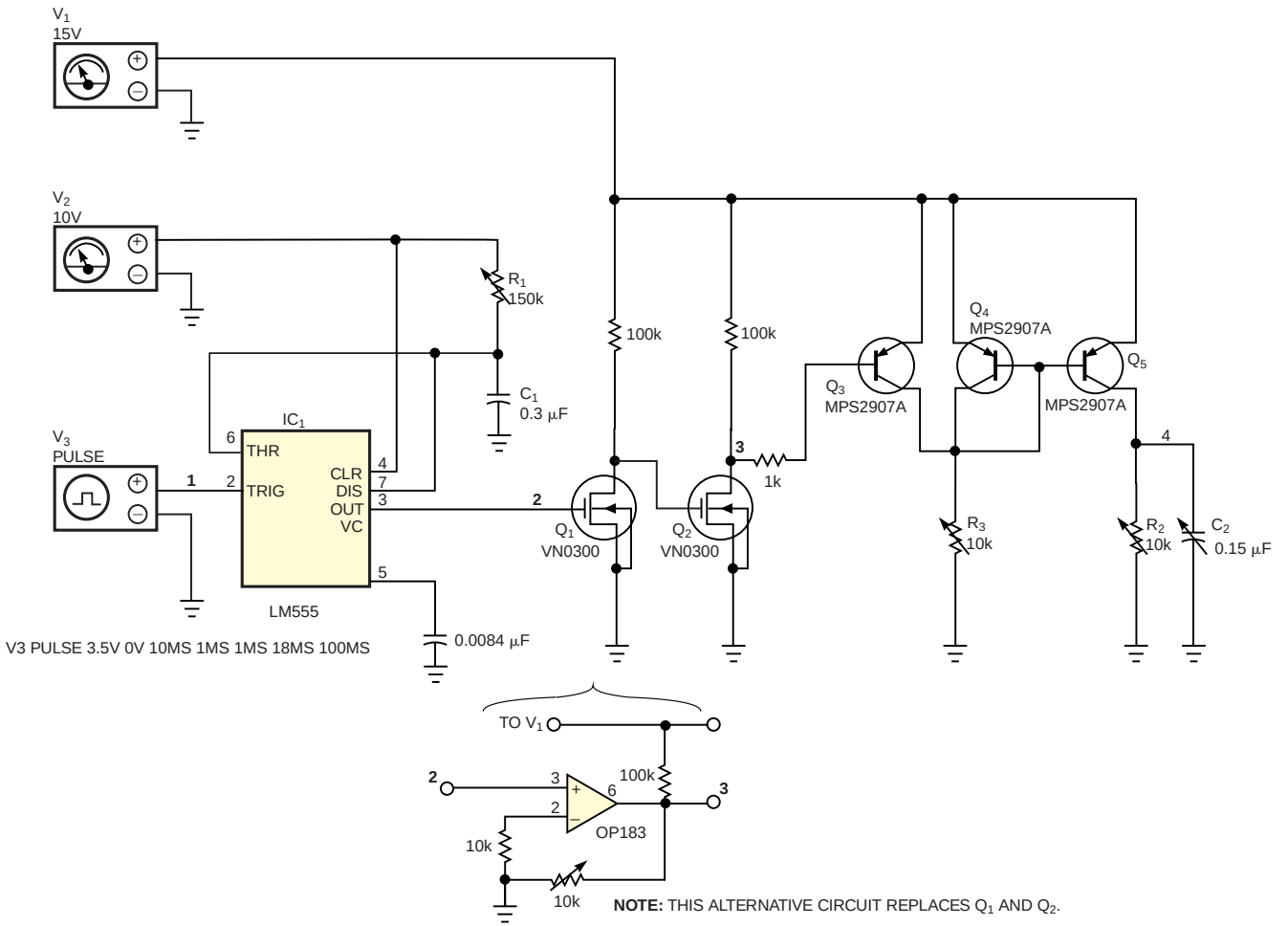

This pulsed and variable current source acts as a charge pump to efficiently drive various capacitive loads.