Figure 3

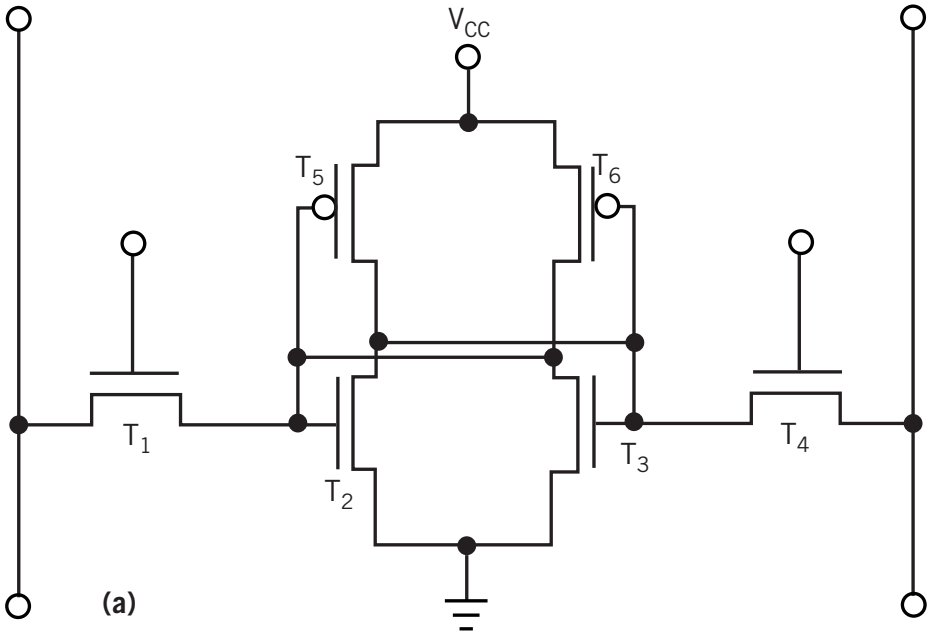

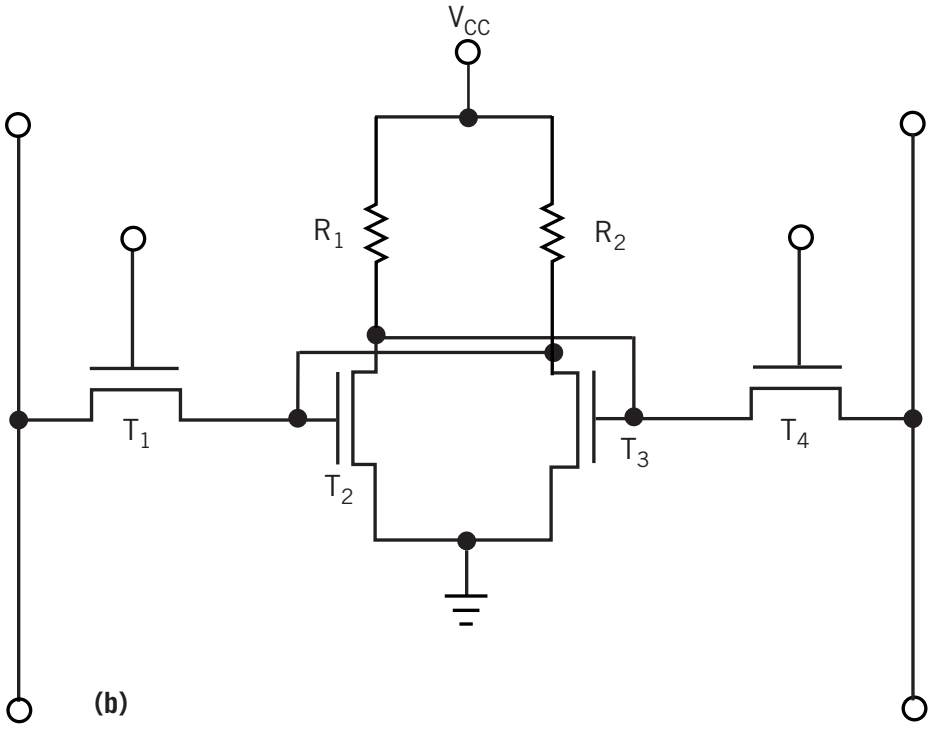

Six-transistor SRAMs (a) have larger cells yet provide lower power consumption, lower operating voltages, and better reliability than their four-transistor, two-resistor counterparts (b). At advanced lithographies, the cell-size differences become negligible (courtesy Cypress Semiconductor).