Figure 1

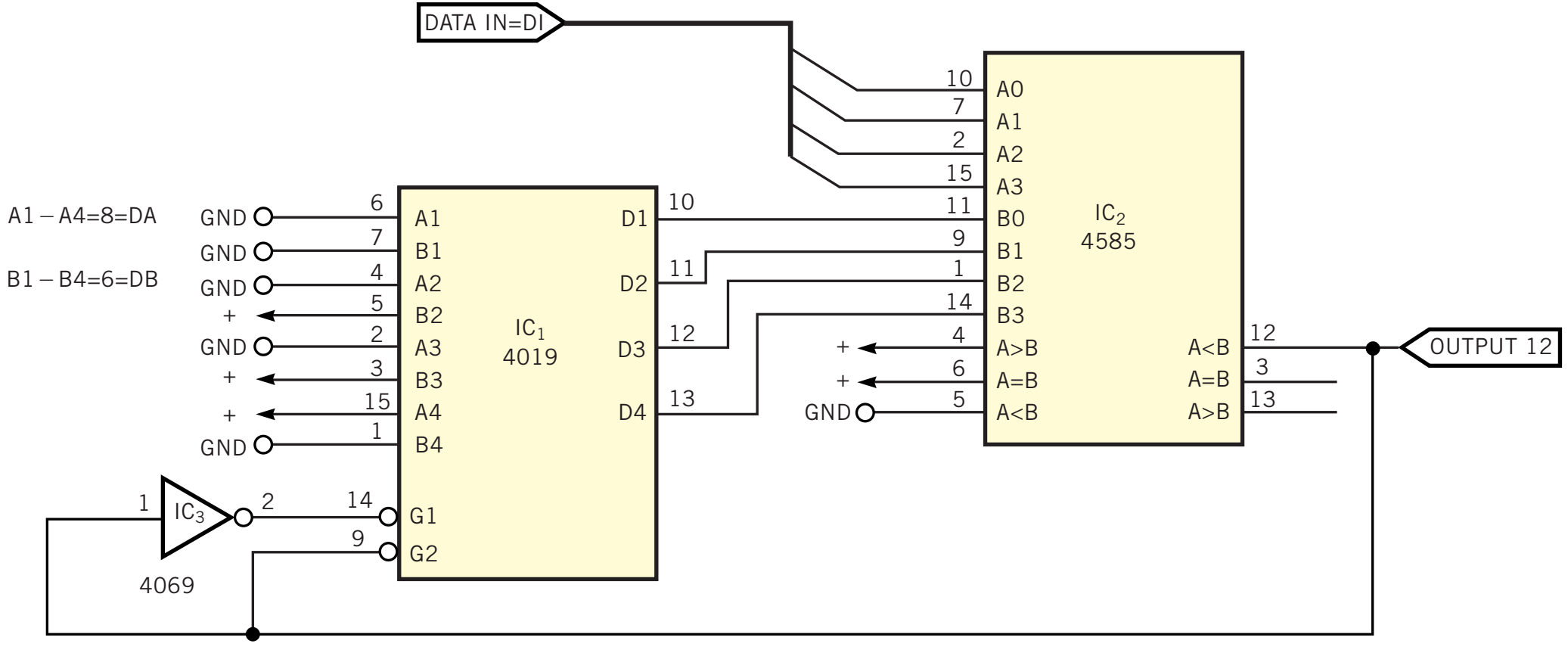

Digital hysteresis can provide a “debounce” function in digitally controlled switching circuits.