Figure 1

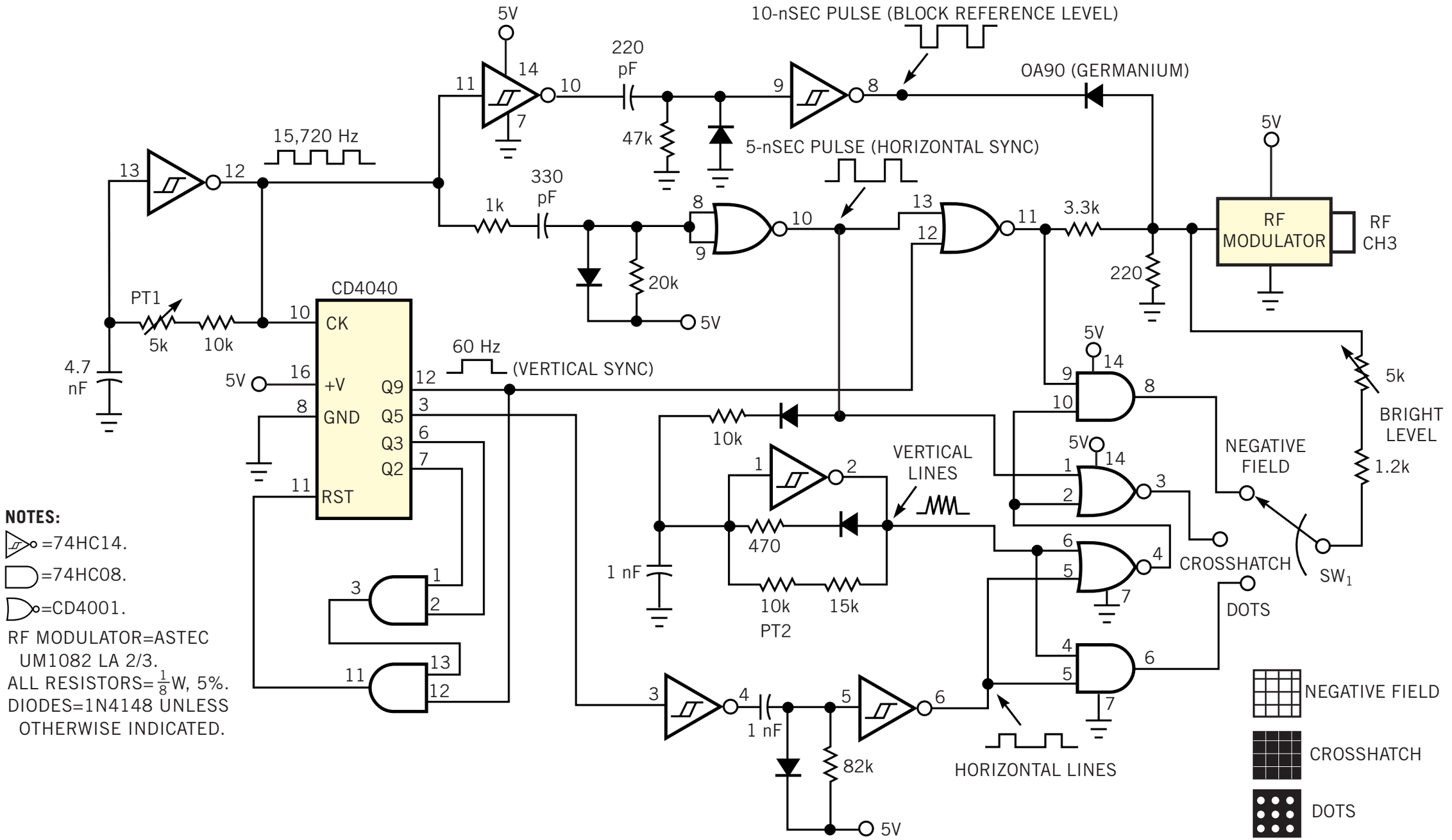

You can avoid the expense of a costly pattern generator by using this simple crosshatch- and dot-generator circuit.