Figure 1

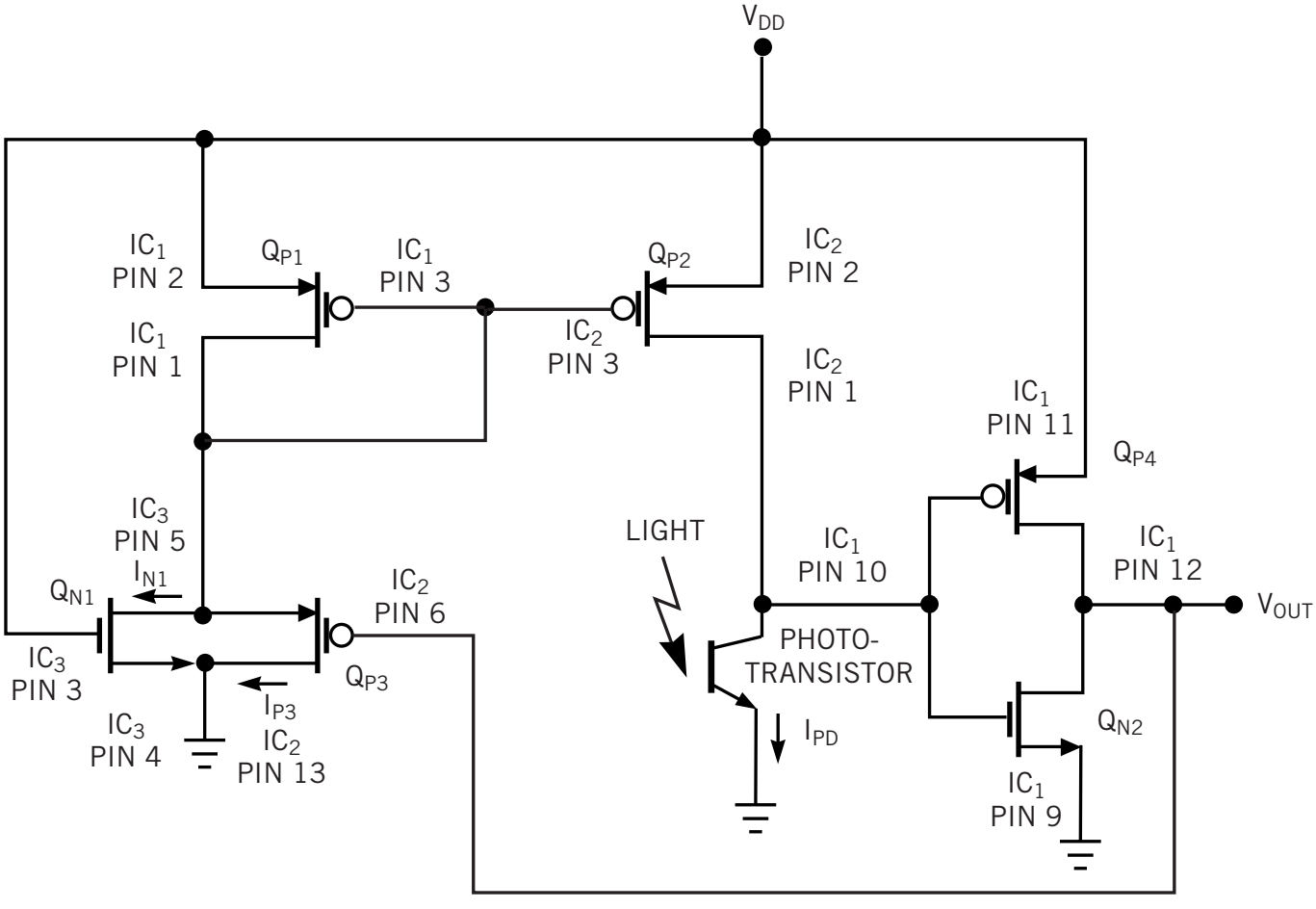

A Schmitt trigger provides hysteresis to this photodetector circuit to afford immunity to false triggering.