Figure 1

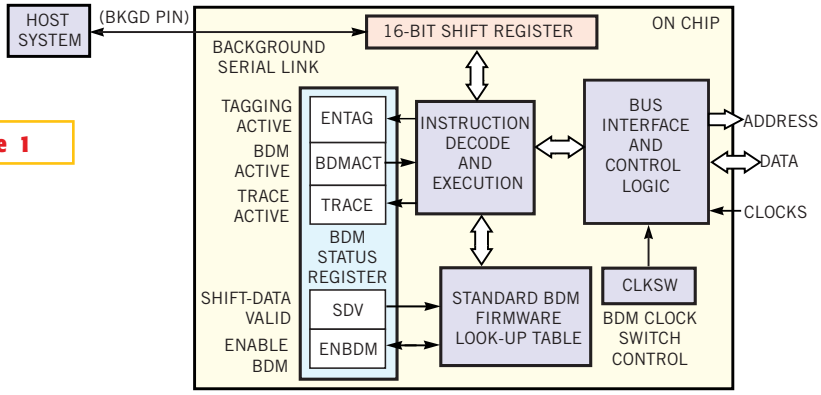

NOTE: BDM=BACKGROUND-DEBUG MODE.

Motorola's BDM (background-debug mode) provides full access to on-chip resources that include an embedded monitor via a single-wire serial link.