Figure 1

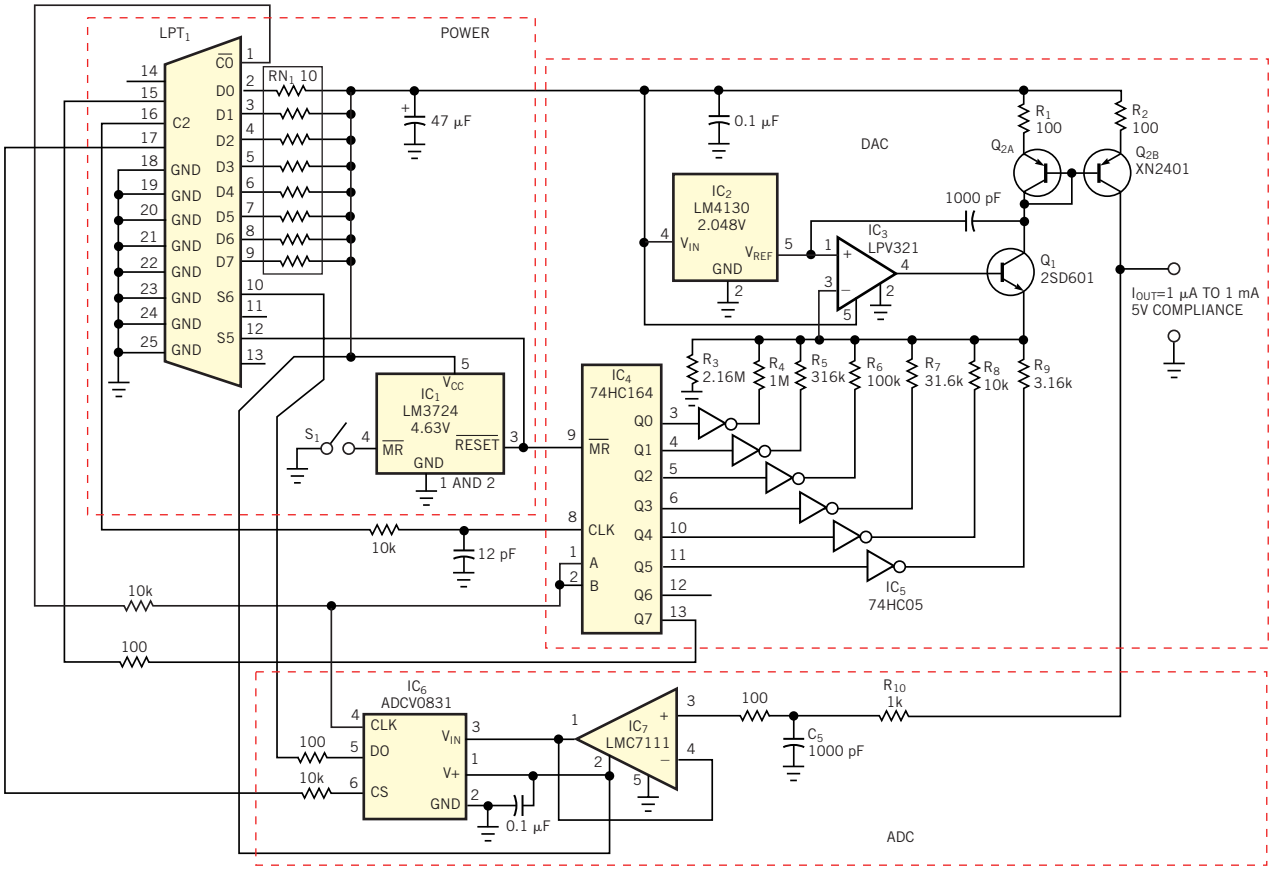

Remember the classic Tek curve tracers? You can easily configure something similar on your PC.