**Figure 1**

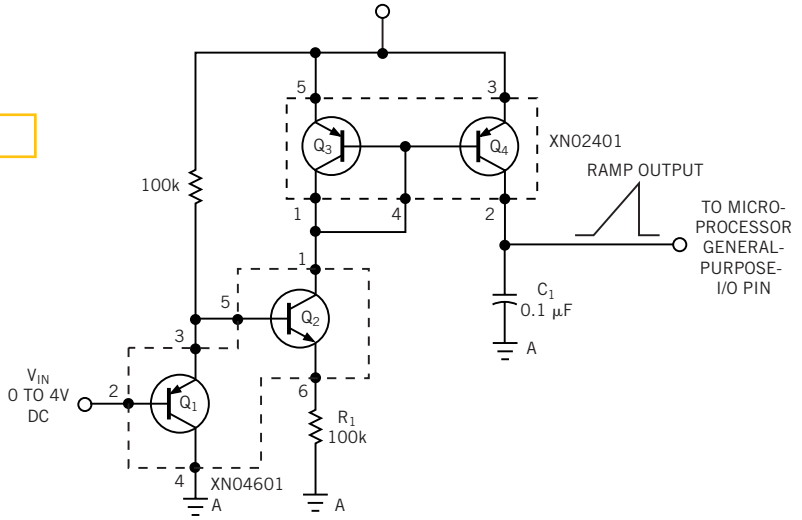


**With two transistor arrays and three discrete components, you can configure an analog front end for a microcontroller.**