Figure 1

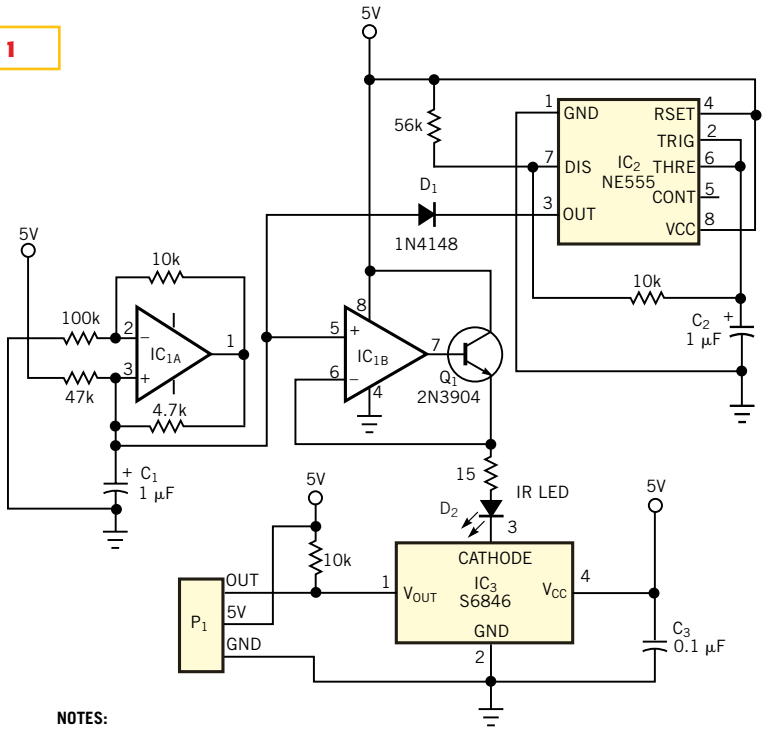

NOTES:
IC_1: TEXAS INSTRUMENTS TLV2252IP.
IC_2: NATIONAL SEMICONDUCTOR LM555CN.
IC_3: HAMMAMATSU S6846.
D_2: LUMEX OED-EL-1L2.

This circuit detects distances considerably lower than commercial IR rangers.