Figure 2

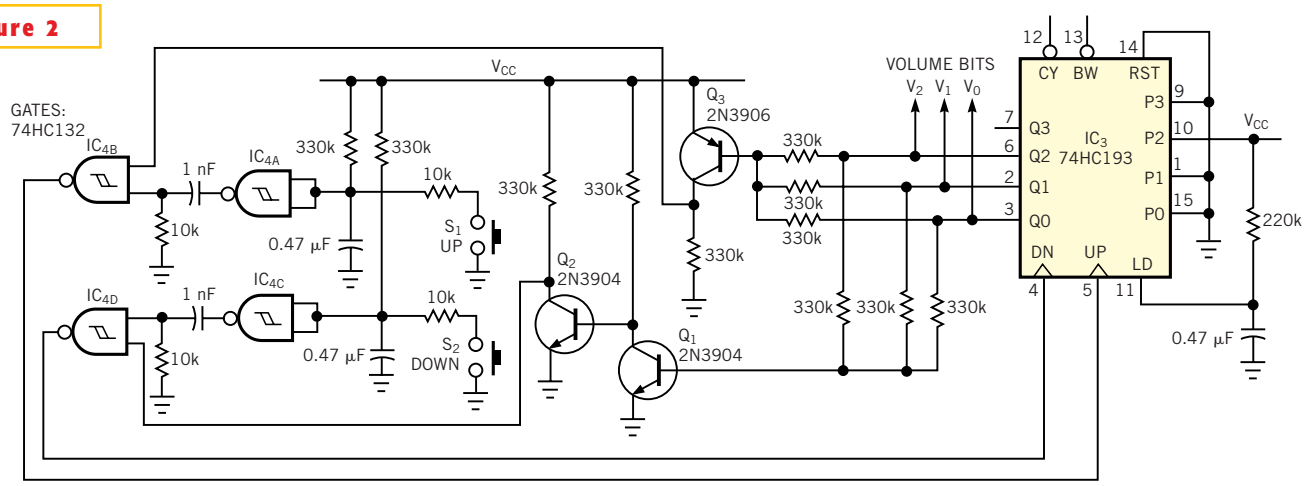

Up/down pushbutton switches step the gain in the circuit of Figure 1.