Figure 1

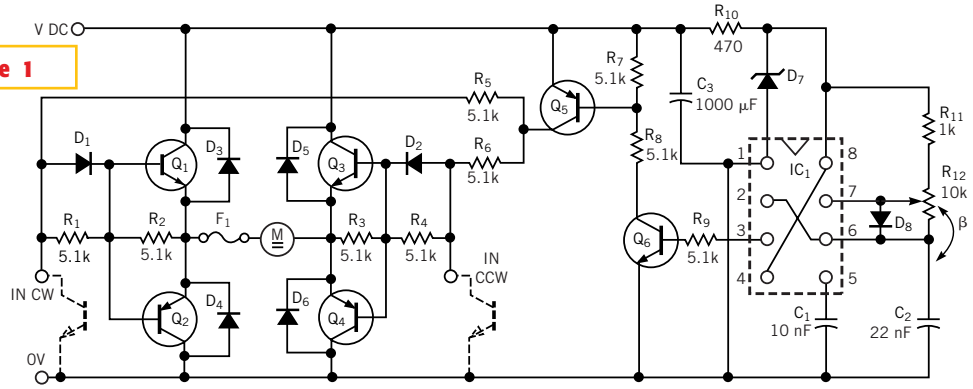

NOTES:
Q_1, Q_3=TIP142.
Q_2, Q_4=TIP147.
Q_5=BC161, BC556, 2N3906.
Q_6=BC160, BC546, 2N3904.
IC_1=555 TIMER.
D_3 TO D_6=BYV26E.
D_1, D_2, D_8=1N4148, 1N4007.
D_7=15V, 0.4W ZENER.

You can set a motor's rotational direction and speed using this simple circuit.