Figure 1

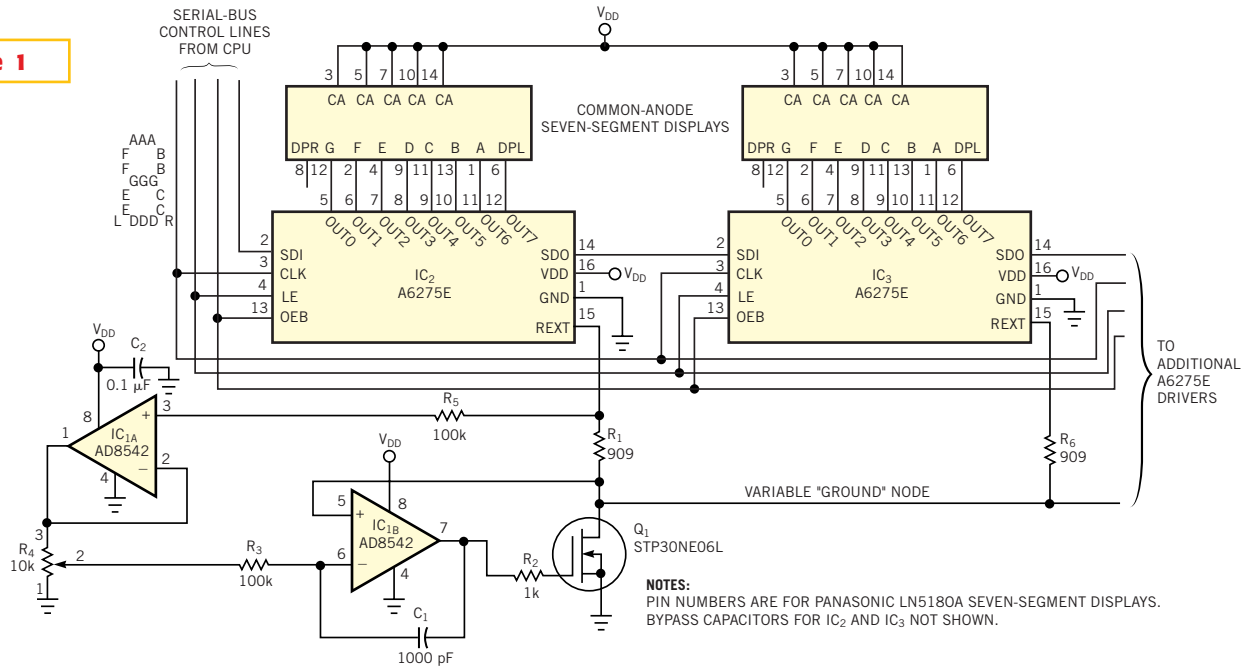

An analog control loop provides an adjustable "ground" node to control the current flowing through the resistors that set the segment currents.