Figure 8

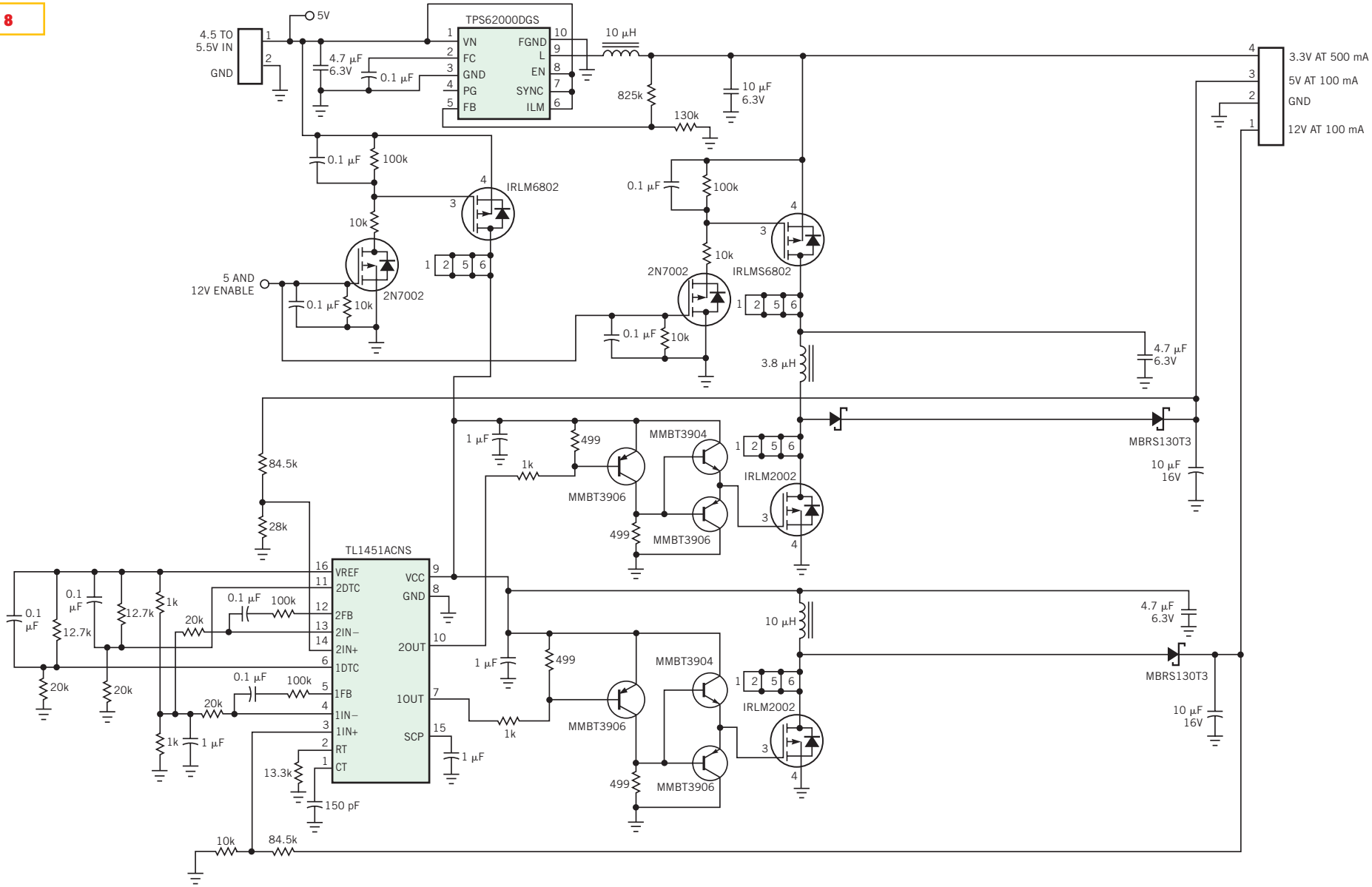

This complete USB power supply has 3.3, 5, and 12V outputs.