Figure 1

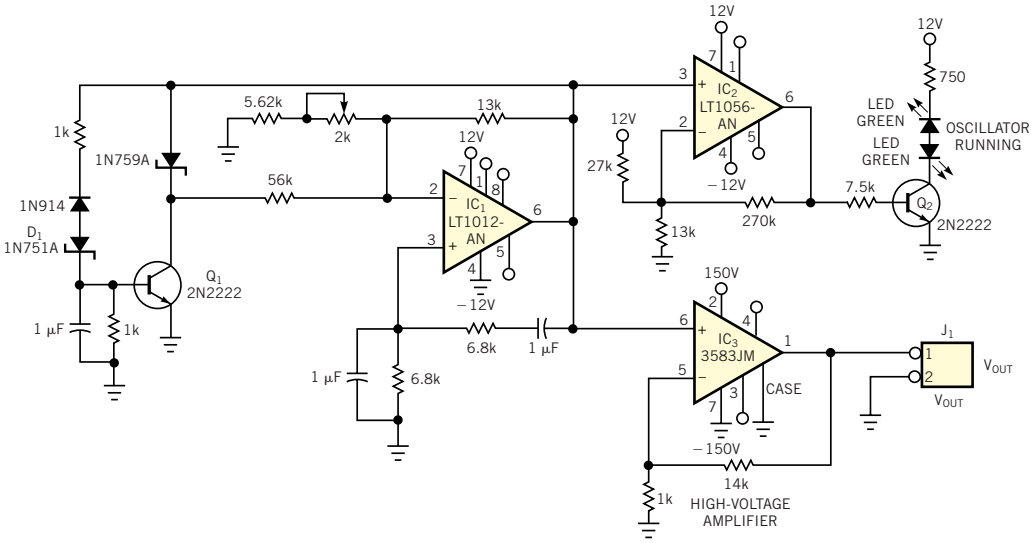

This Wien-bridge oscillator is, according to the author, the first oscillator that can function at gains below unity.