Figure 1

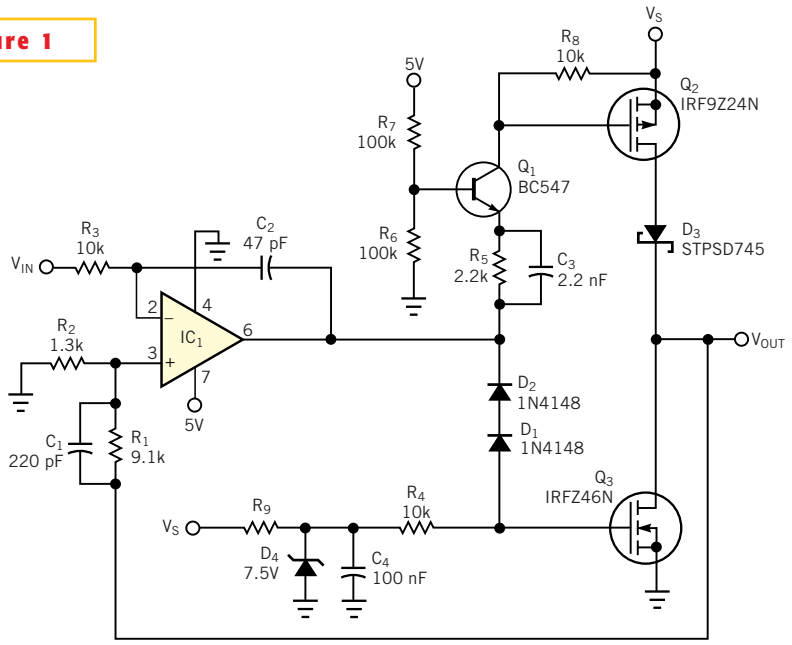

This simple circuit allows you to control voltages far in excess of the positive-supply rail.