Figure 9

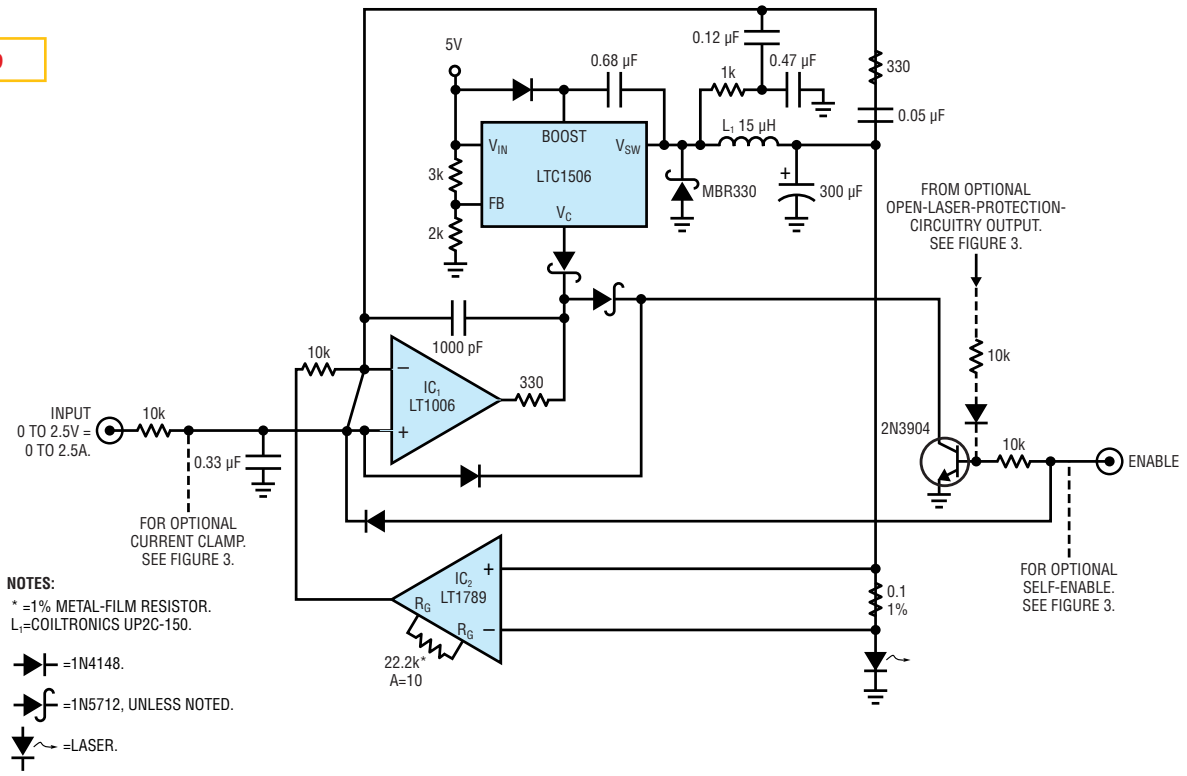

A switched-mode version of Figure 3 provides 2.5A. Feedback-loop compensation accommodates the switching-regulator delay. Clamp, protection, and self-enable circuits are optional.