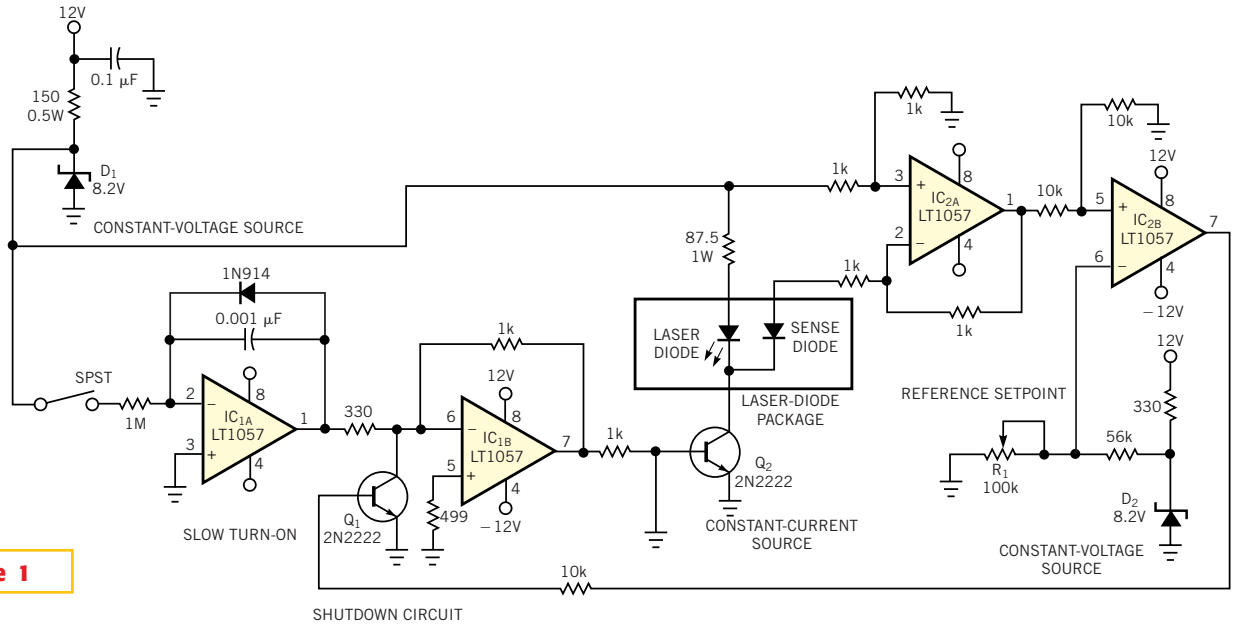

Figure 1

Constant voltage and current and slow turn-on time are the keys to laser diodes' survival.