Figure 1

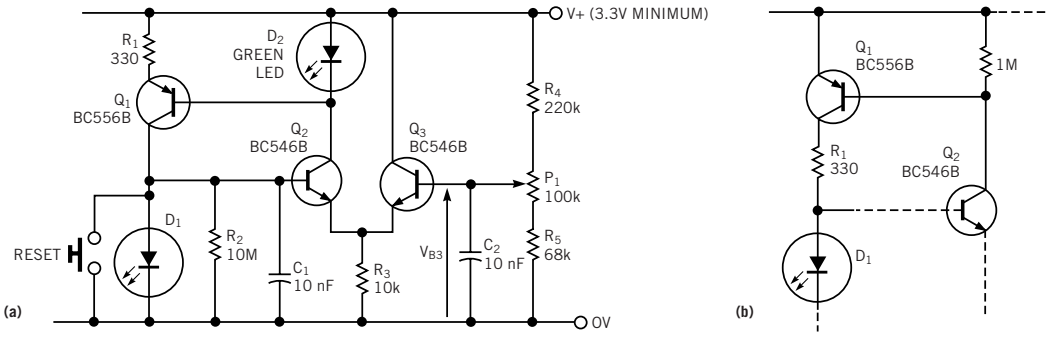

This circuit uses LEDs as both light-detecting and -indicating devices (a). A modification replaces the voltage-reference LED, D_2, by a resistor (b).