Figure 1

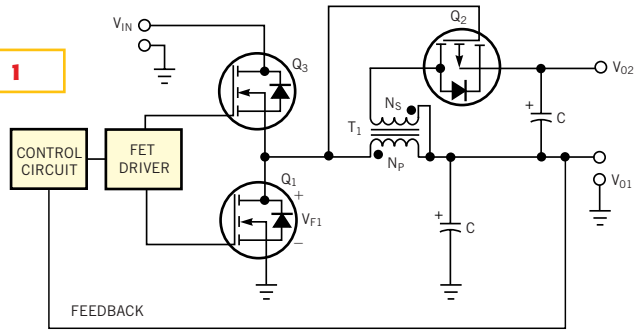

This synchronous buck converter has an auxiliary-output winding.