Figure 1

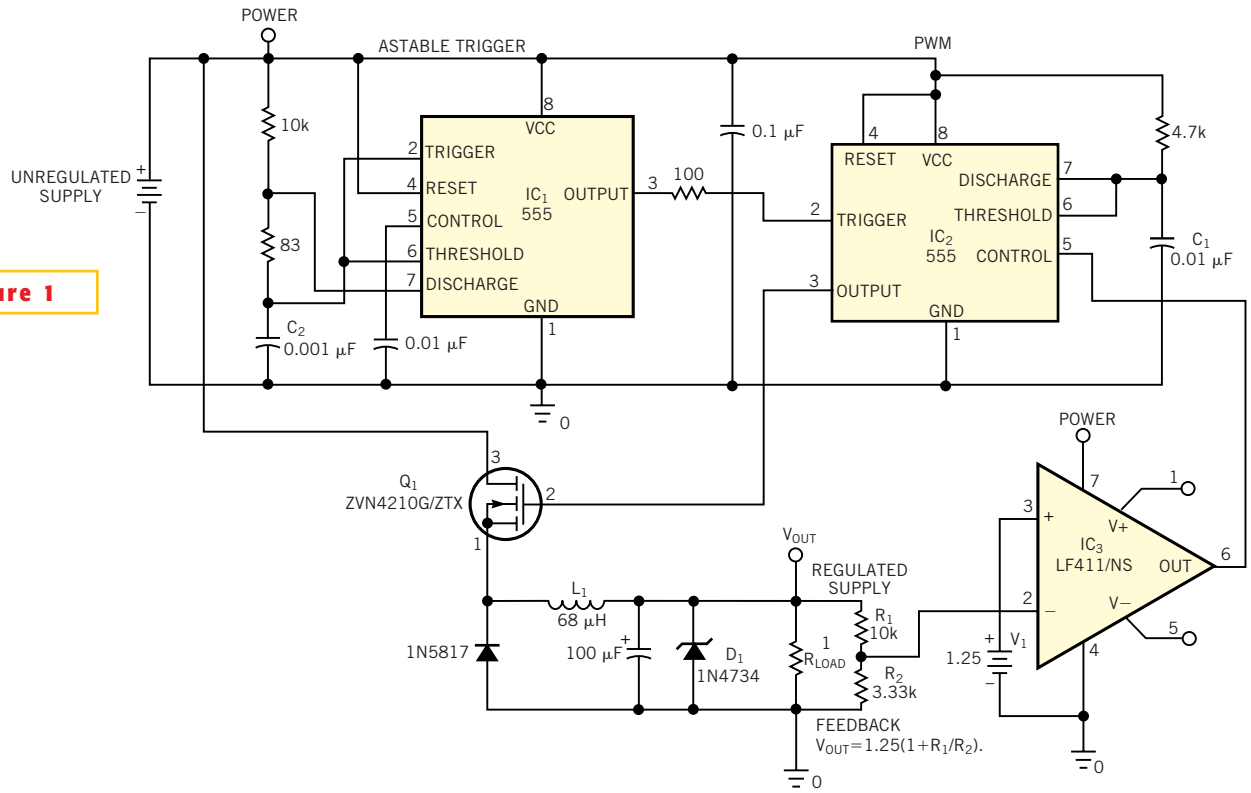

Here's one more use for the ubiquitous 555 timer: a switch-mode power supply.