Figure 2

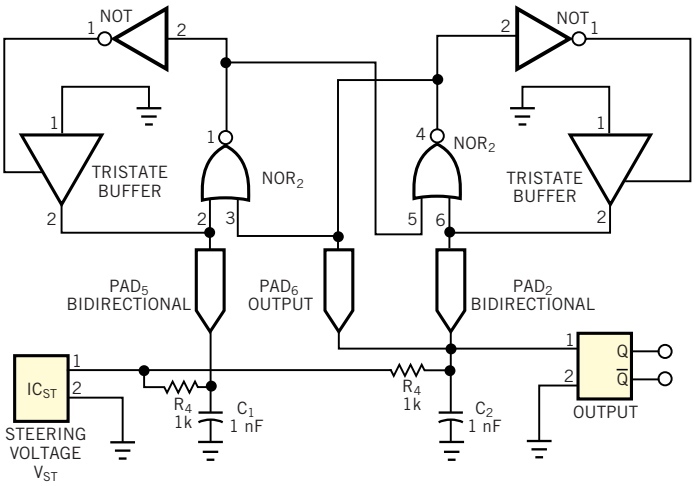

This VCO uses an EPLD and has high gain, expressed in kilohertz per volt.