Figure 1

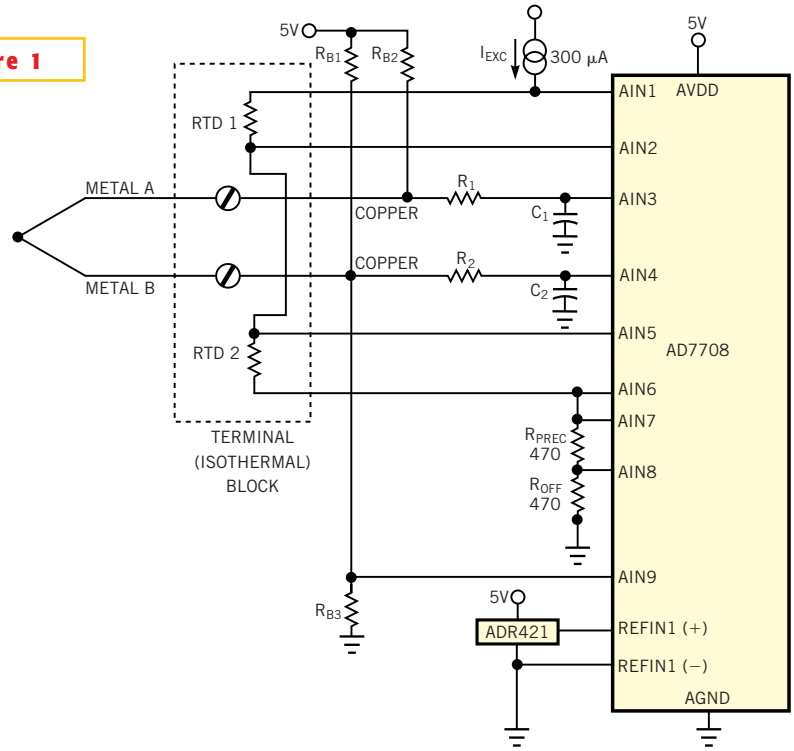

This circuit provides accurate cold-junction compensation in temperature-measurement systems.