Figure 3

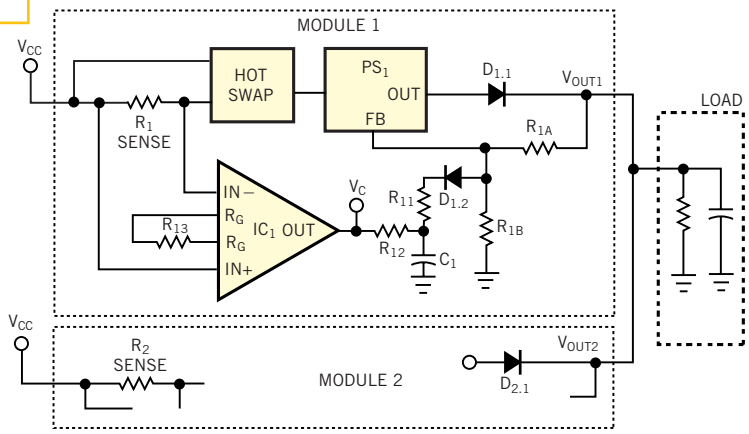

The addition of an instrumentation amplifier and a few passive components provides sag- and glitch-free redundant performance.