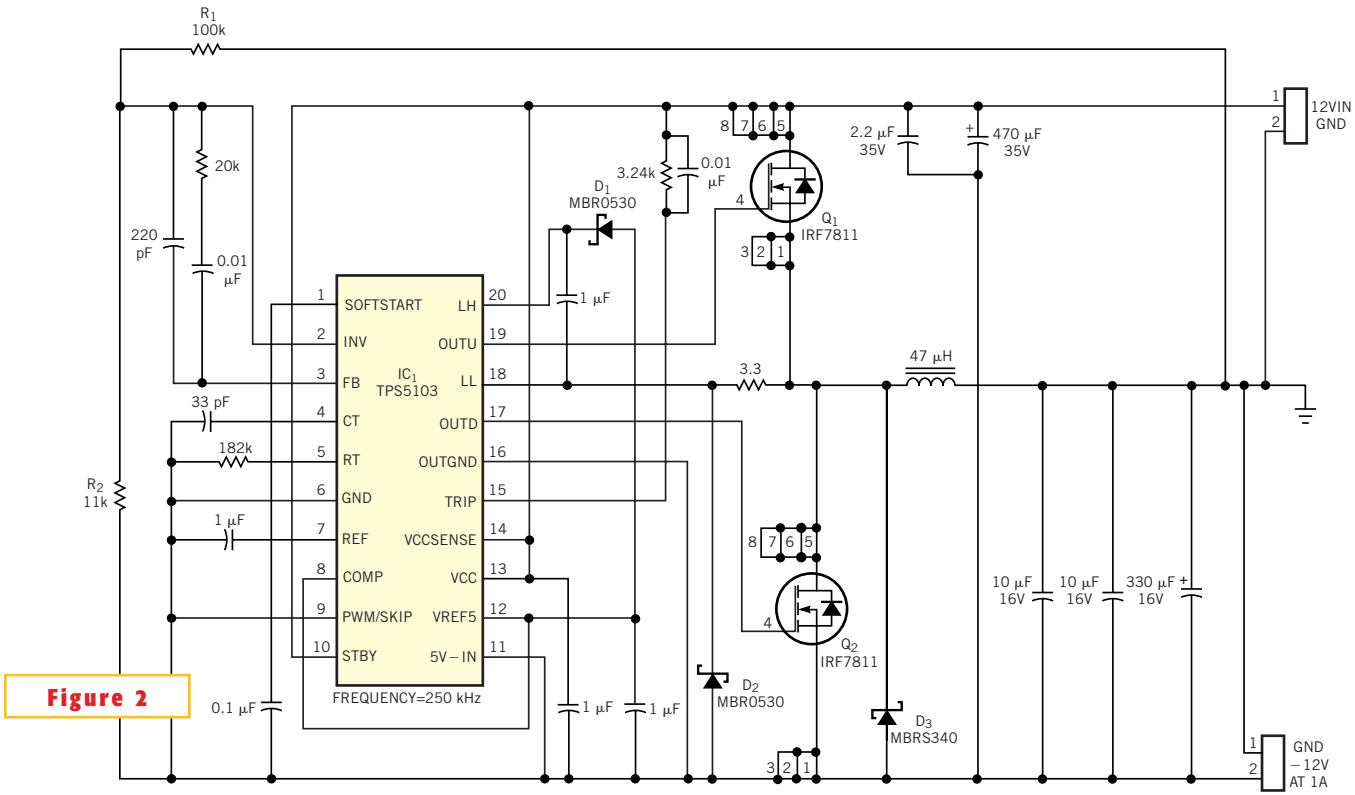

Figure 2

A synchronous buck controller forms the heart of this negative-flyback configuration.