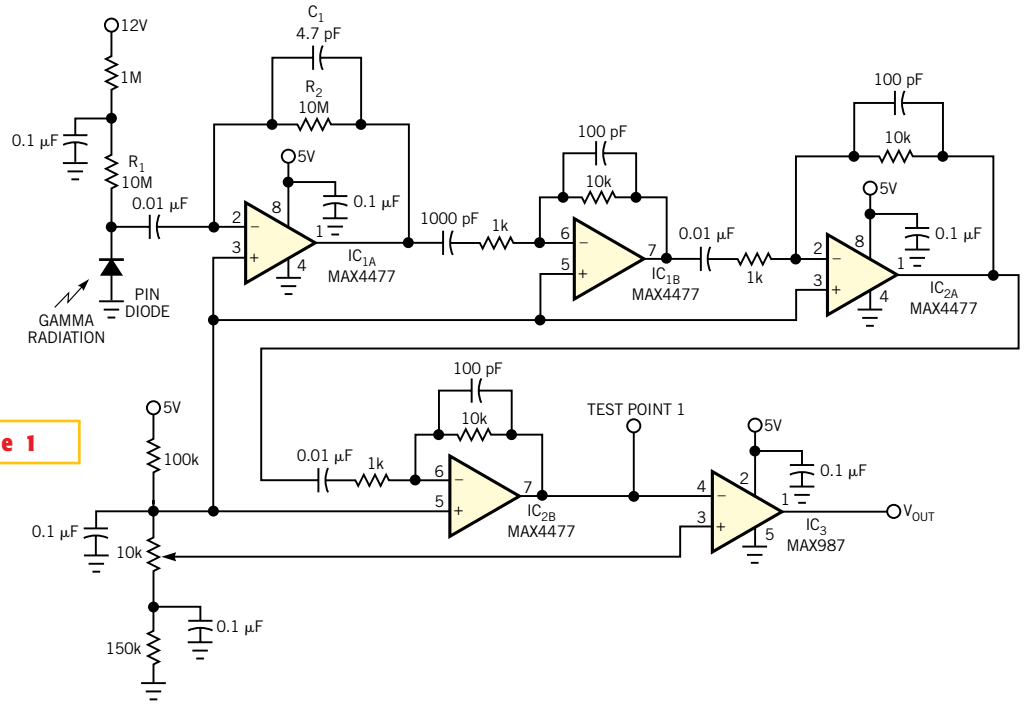

Figure 1

When a single gamma photon with sufficient energy strikes the PIN photodiode in this circuit, the output of the comparator pulses high.