Figure 1

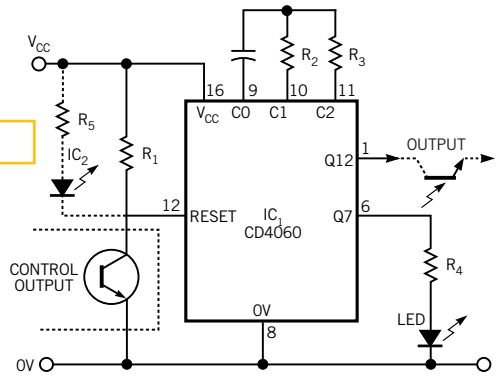

This simple timing circuit ensures that a controller's spurious pulses do not affect a system's start-up operation.