Figure 2

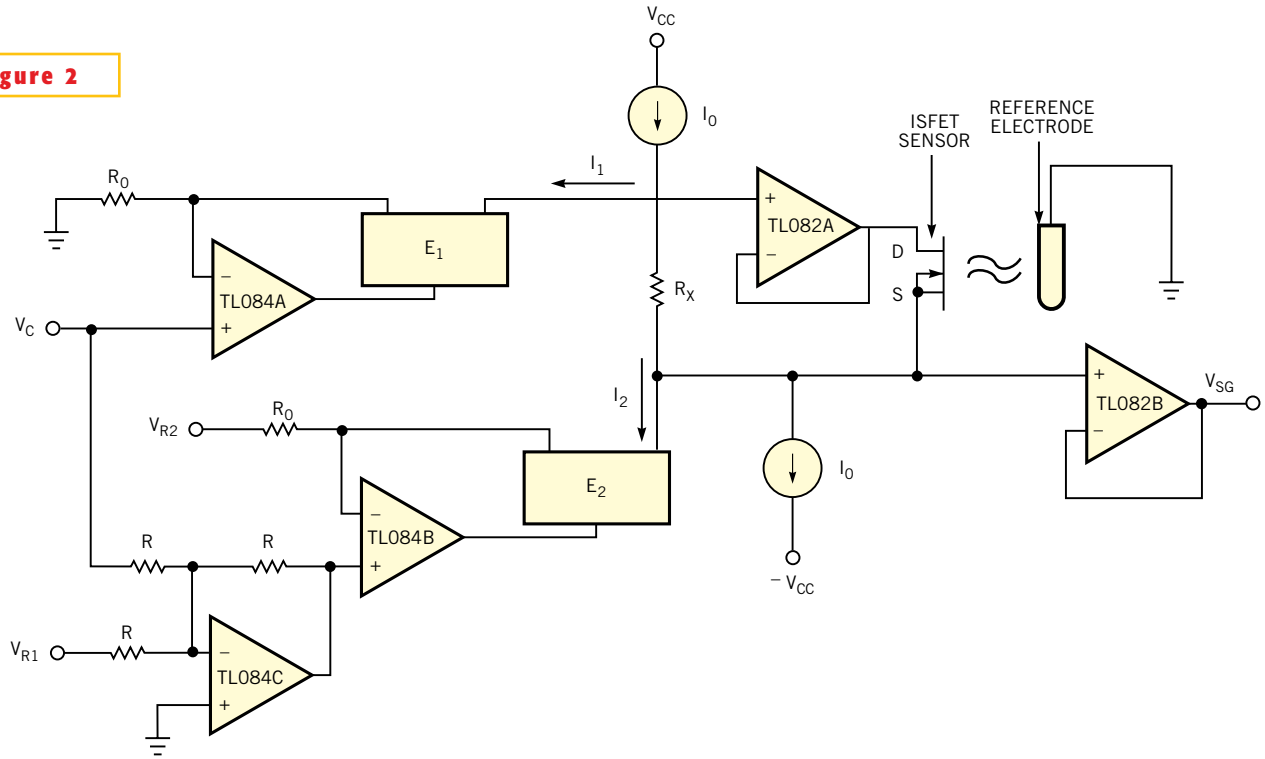

This novel floating current source represents an improved way to bias ISFET sensors.