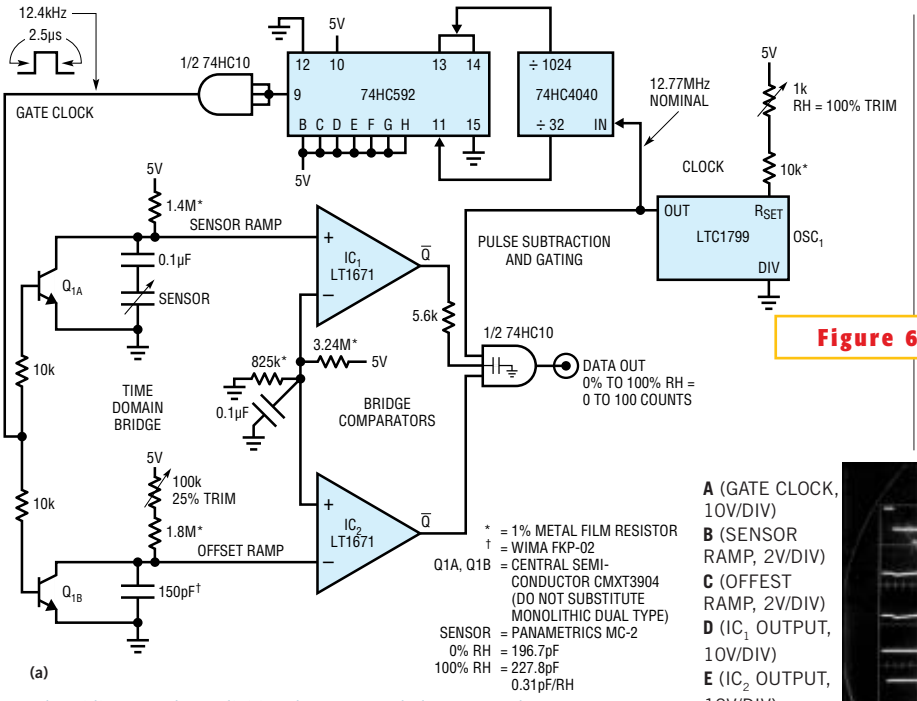

Figure 6

A humidity-transducer digitizer has a grounded sensor of 1% accuracy (a). Q_{1A} and Q_{1B} produce ramp outputs (Traces B and C), and IC_1 and IC_2 digitize the ramp times (Traces D and E). The digitized output consists of 0 to 100 counts for 0 to 100% RH (Trace F) (b).

A (GATE CLOCK, 10V/DIV)
B (SENSOR RAMP, 2V/DIV)
C (OFFEST RAMP, 2V/DIV)
D (IC_1 OUTPUT, 10V/DIV)
E (IC_2 OUTPUT, 10V/DIV)
F (DIGITIZED OUPUT, 10V/DIV)

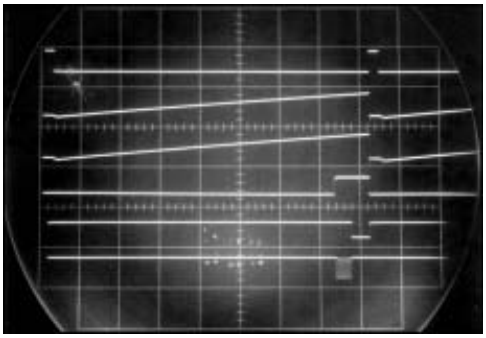

(b) **HORIZONTAL SCALE=10 µSEC/DIV**