Figure 1

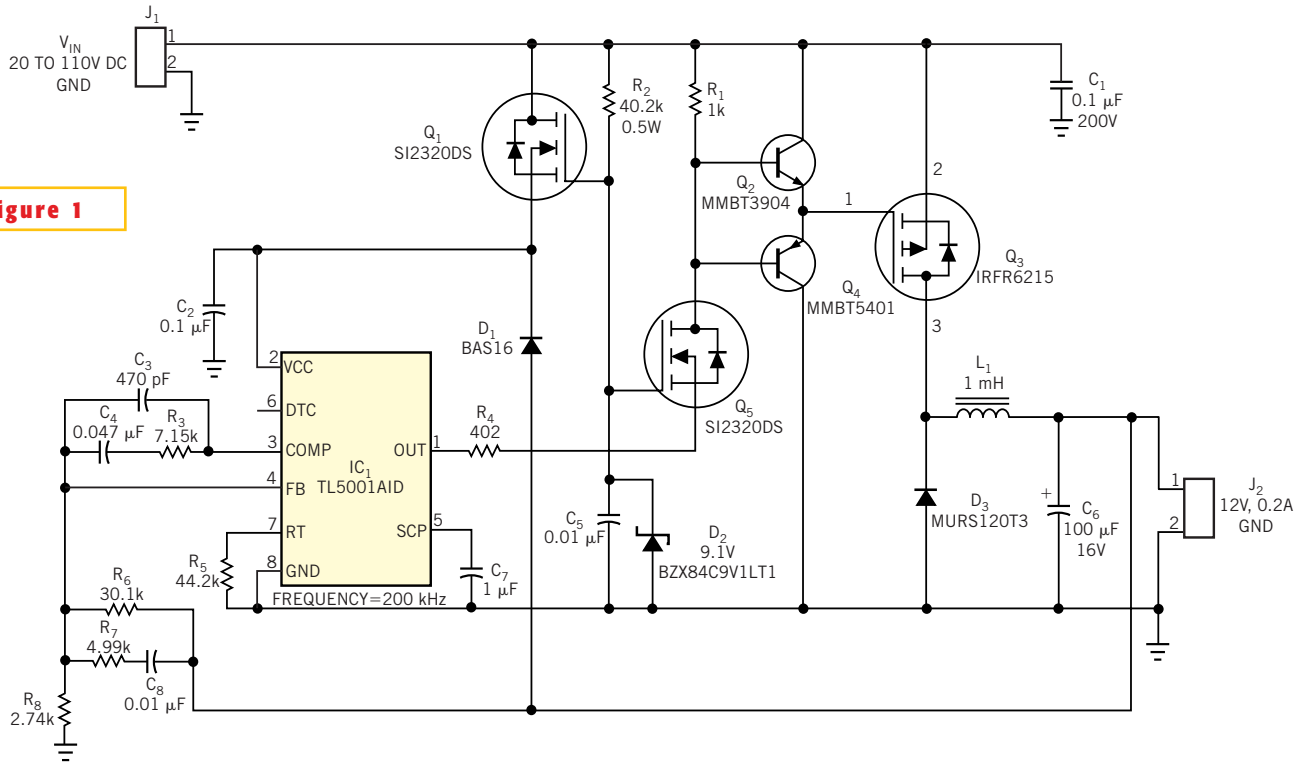

A buck converter uses switched-source gate drive to generate high output voltages.