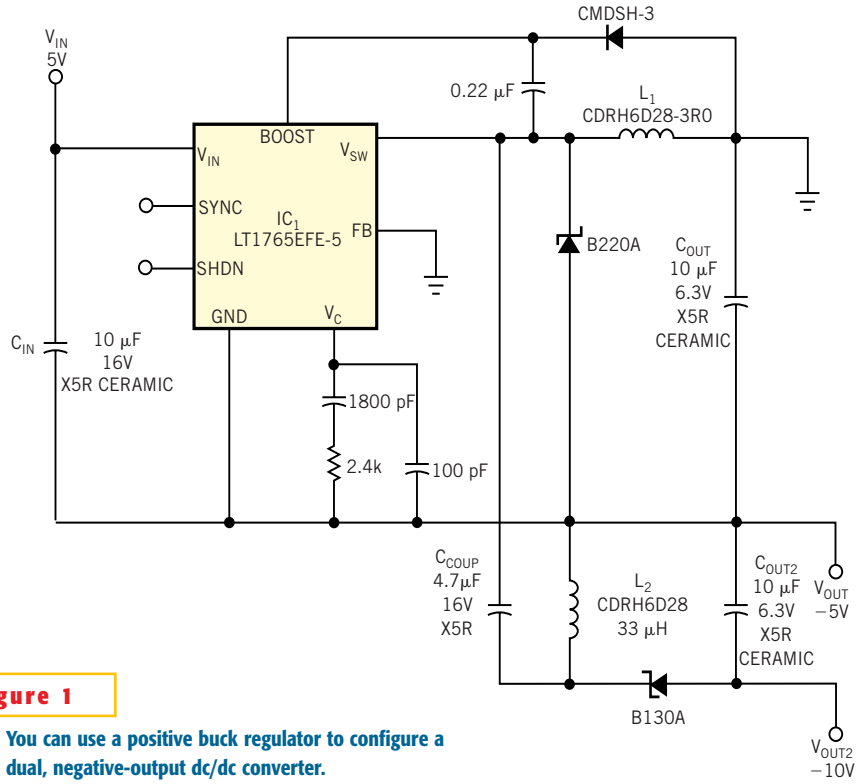

Figure 1

You can use a positive buck regulator to configure a dual, negative-output dc/dc converter.