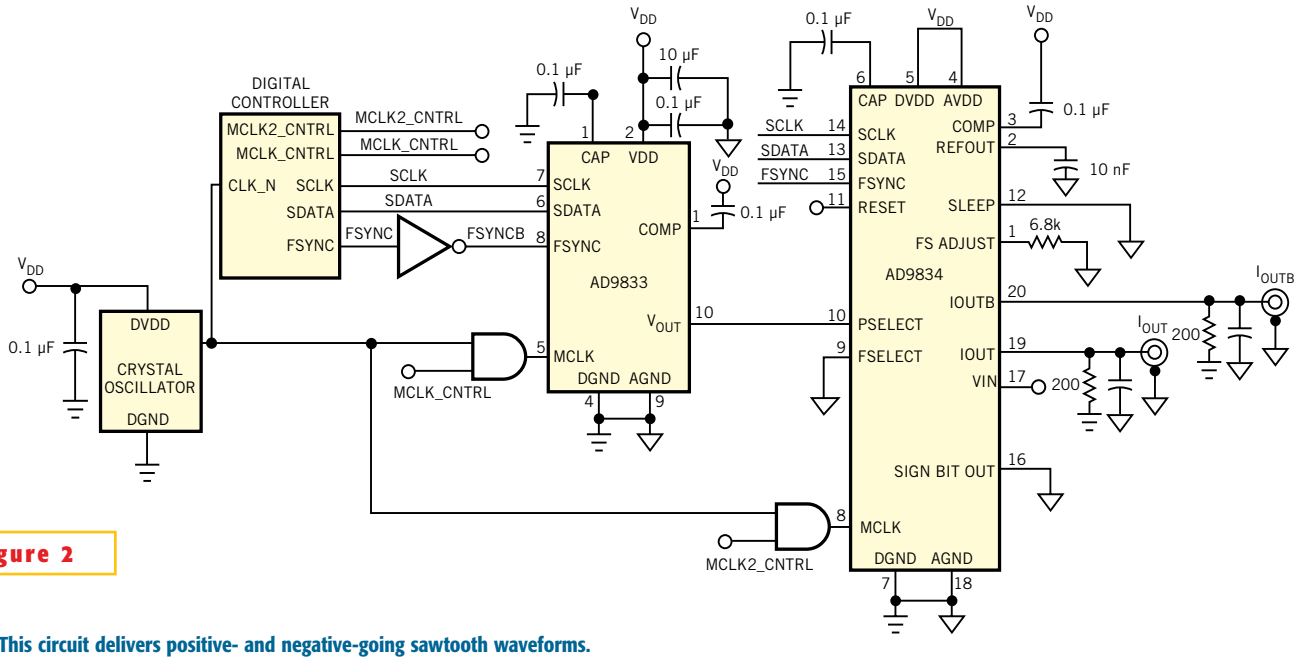

Figure 2

This circuit delivers positive- and negative-going sawtooth waveforms.