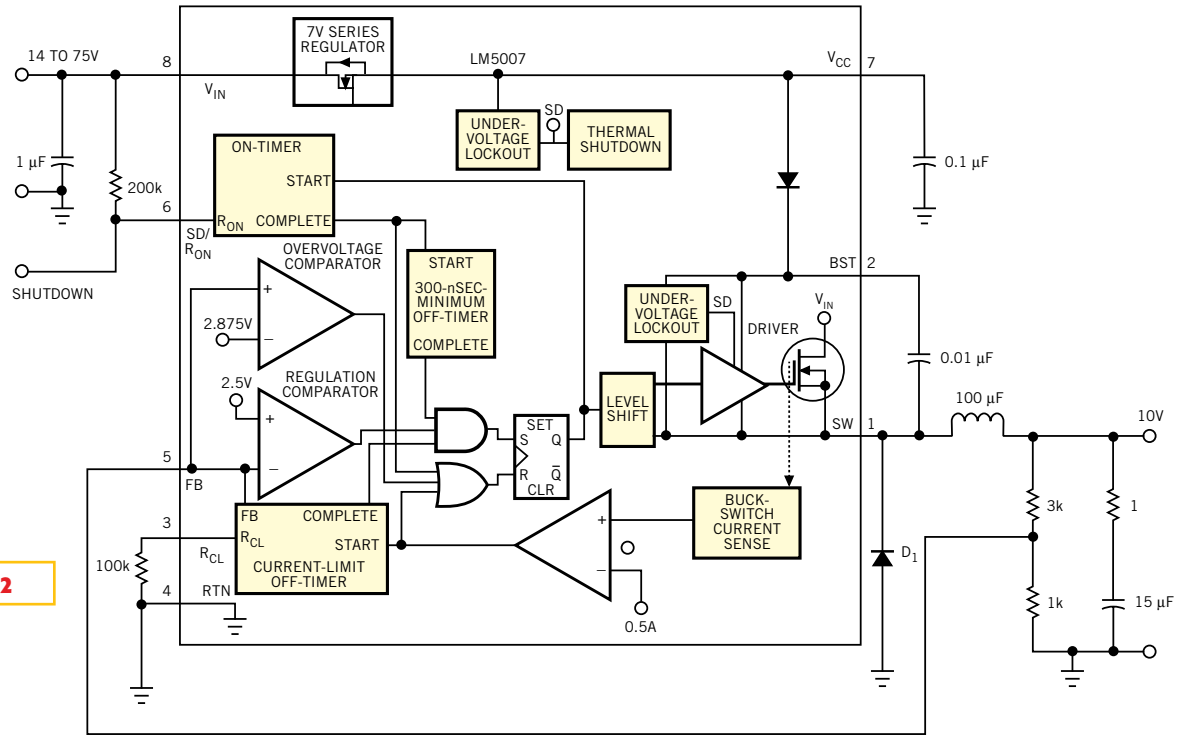

Figure 2

In this buck regulator, the switching frequency remains constant over a wide range of input voltages.