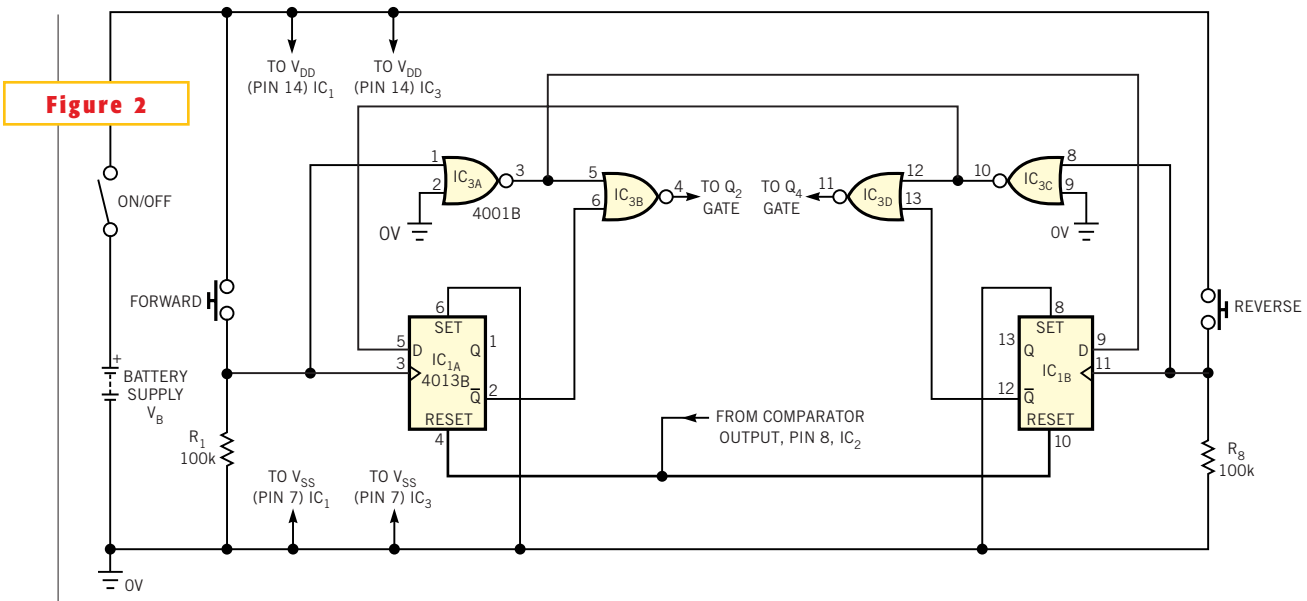

This addition to the circuit in Figure 1 yields a nonlatching controller, in which the motor runs only when the associated switch is closed.