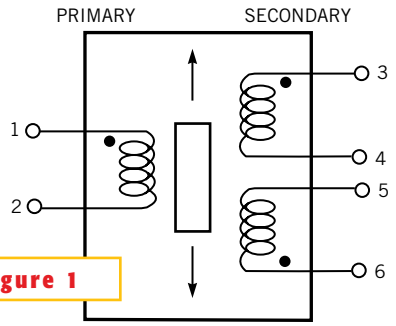

Figure 1

An LVDT is an electromechanical measuring device that converts the position of a magnetic core into electrical signals.