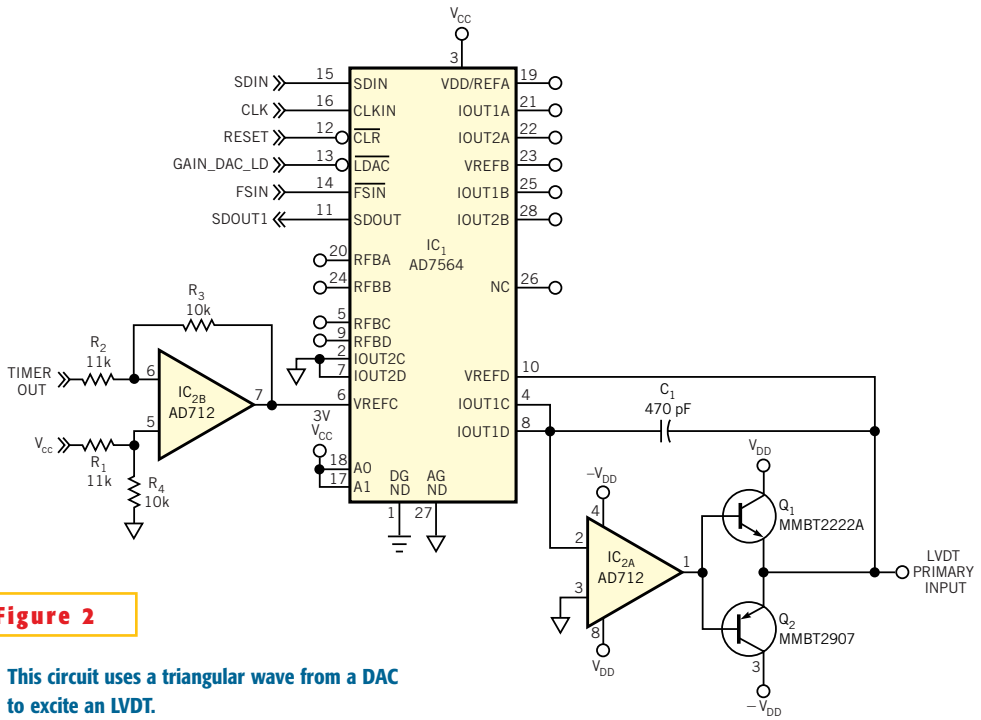

Figure 2

This circuit uses a triangular wave from a DAC to excite an LVDT.