Figure 1

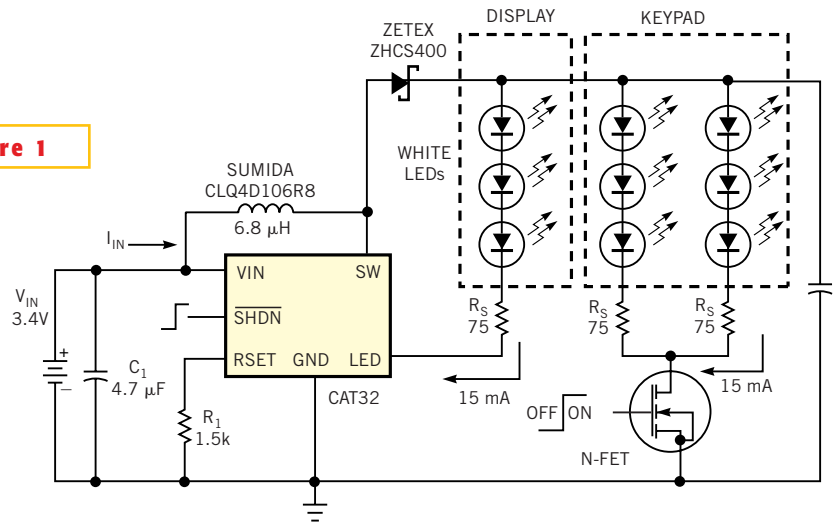

A single IC boosts the battery voltage to drive a total of nine LEDs.