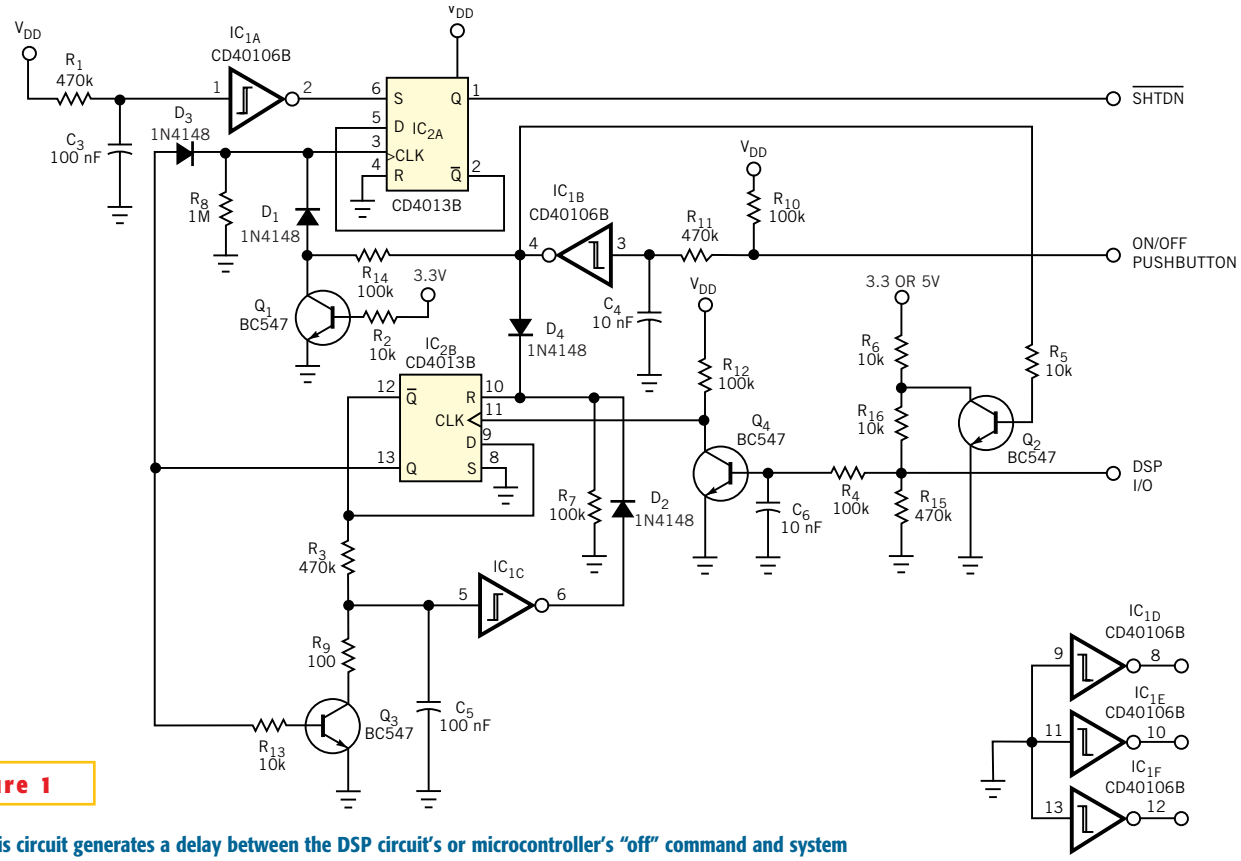

Figure 1

This circuit generates a delay between the DSP circuit's or microcontroller's "off" command and system shutdown.