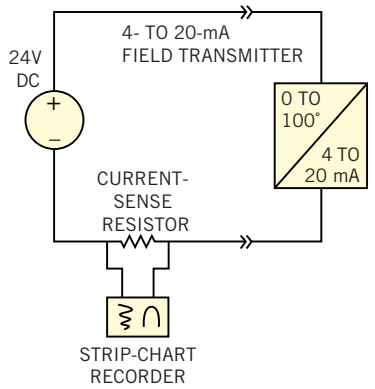

Figure 1 Industrial applications widely use the basic structure of a 4- to 20-mA current loop.