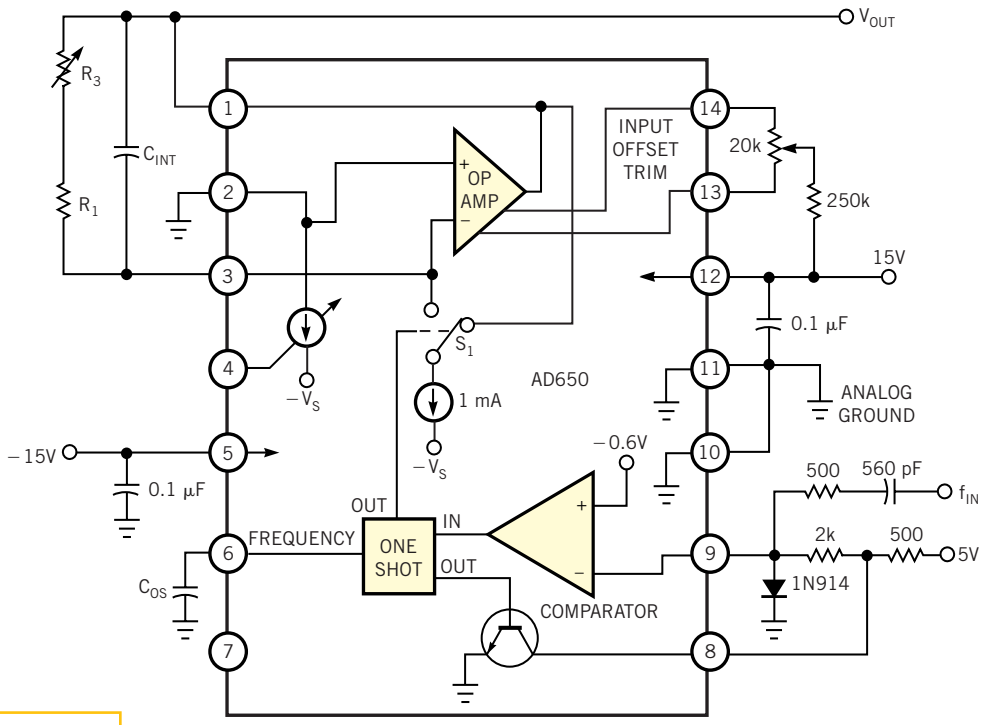

Figure 1

This circuit shows the AD650 in a frequency-to-voltage configuration.