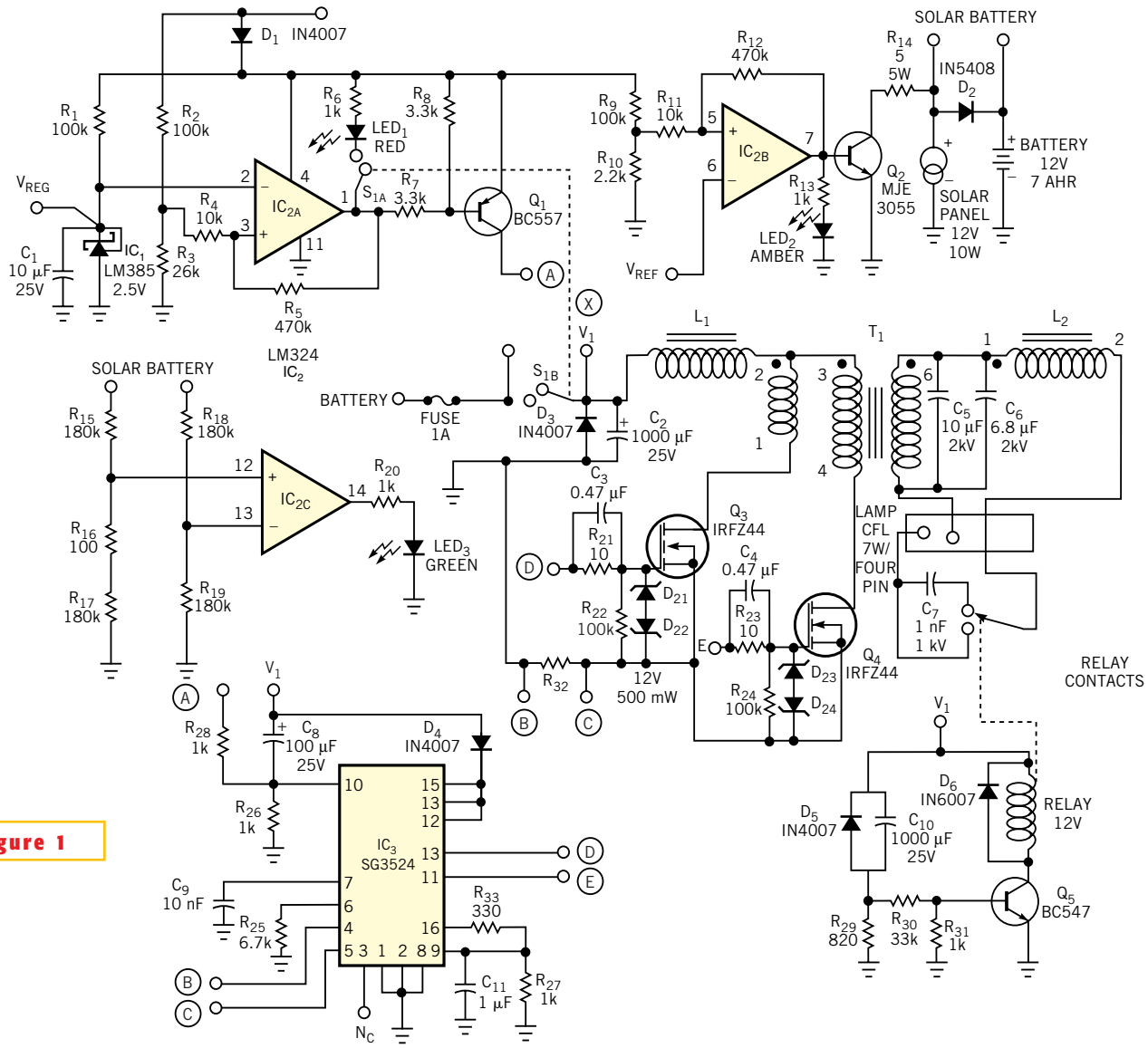

Figure 1

This solar-powered lantern driver can serve as an emergency lighting system.