Figure 1

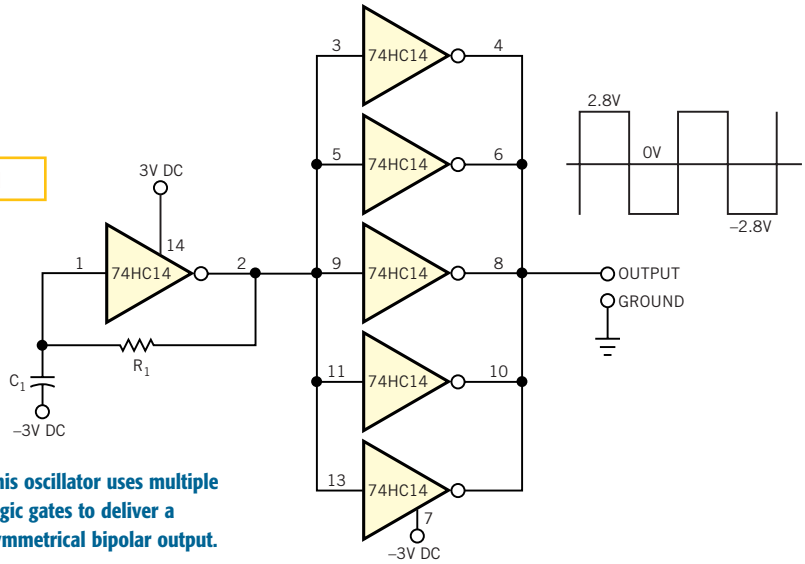

This oscillator uses multiple logic gates to deliver a symmetrical bipolar output.