Figure 1

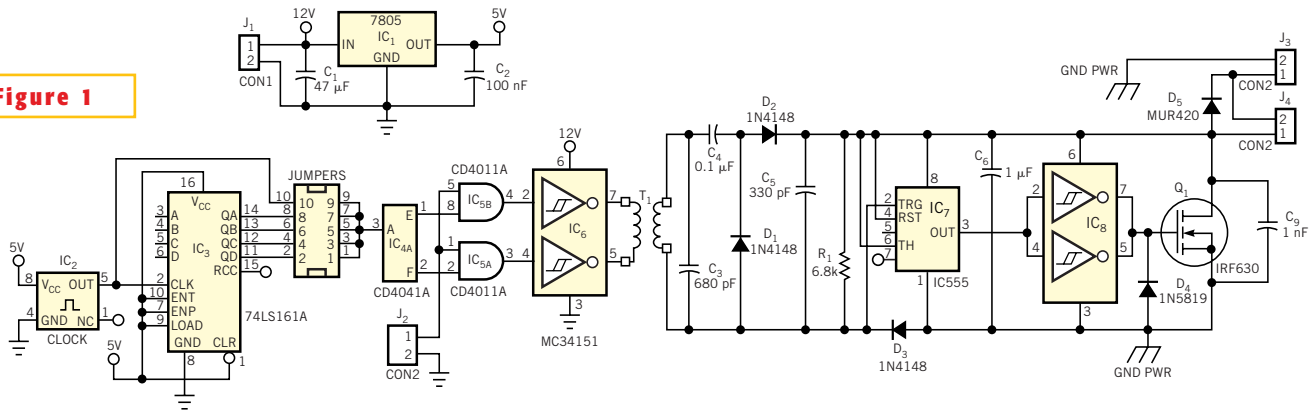

A modulation scheme makes it possible to obtain isolated gate drive for a power MOSFET over a wide duty-cycle range.