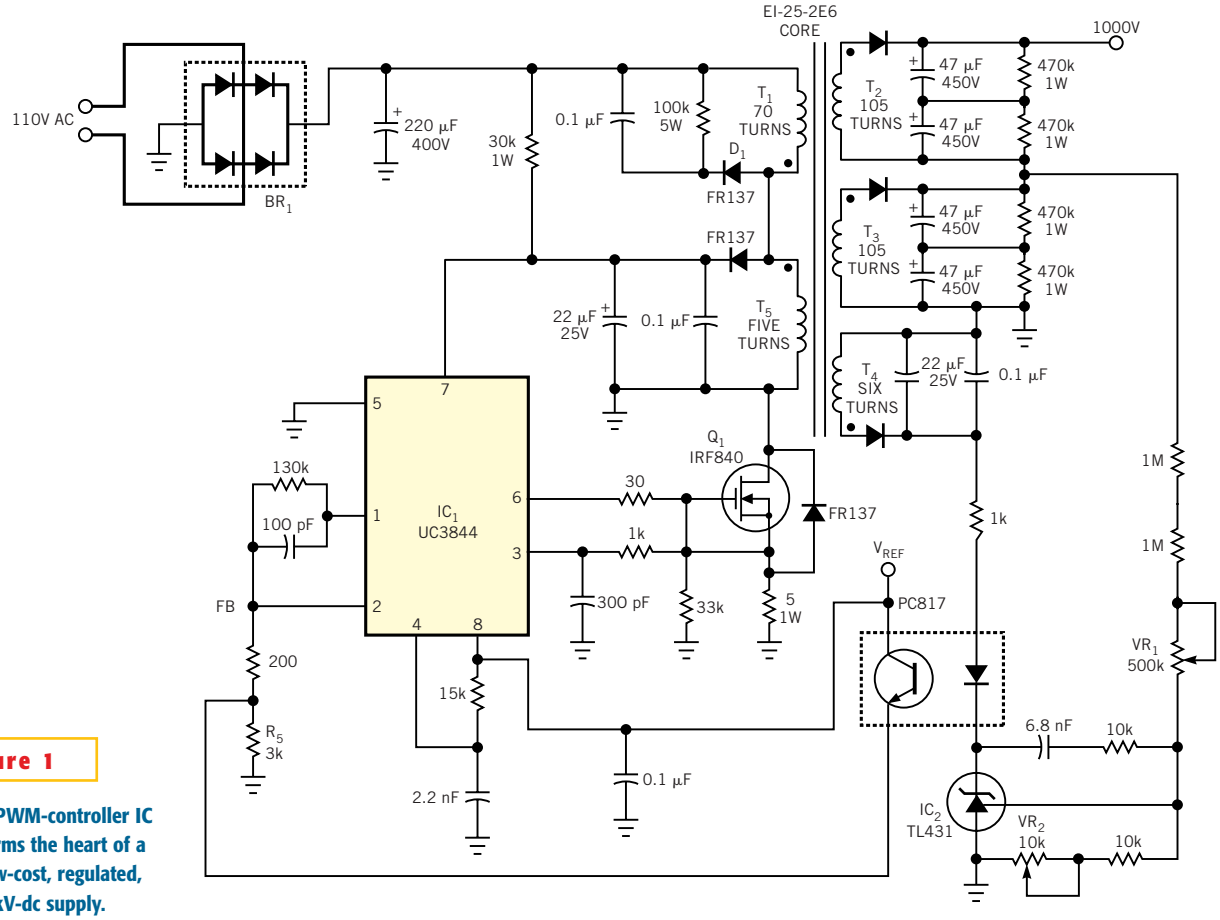

Figure 1

A PWM-controller IC forms the heart of a low-cost, regulated, 1-kV-dc supply.