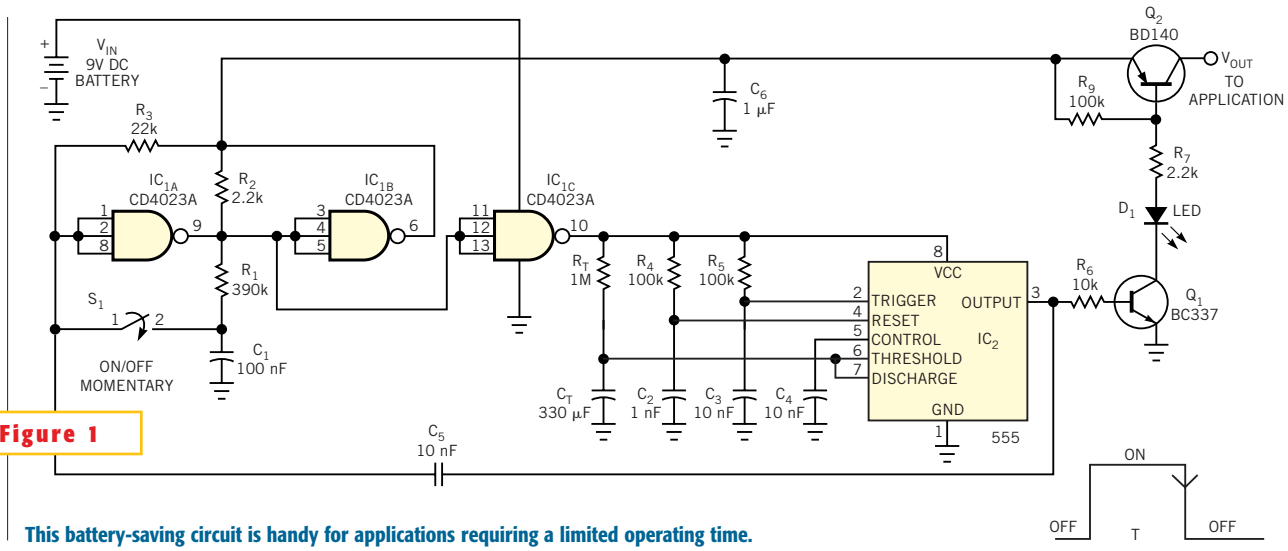

Figure 1

This battery-saving circuit is handy for applications requiring a limited operating time.